92001412

FARMATIC

Miz-Mill

AIR CONVEYOR

The trouble free way to move feed over long distances

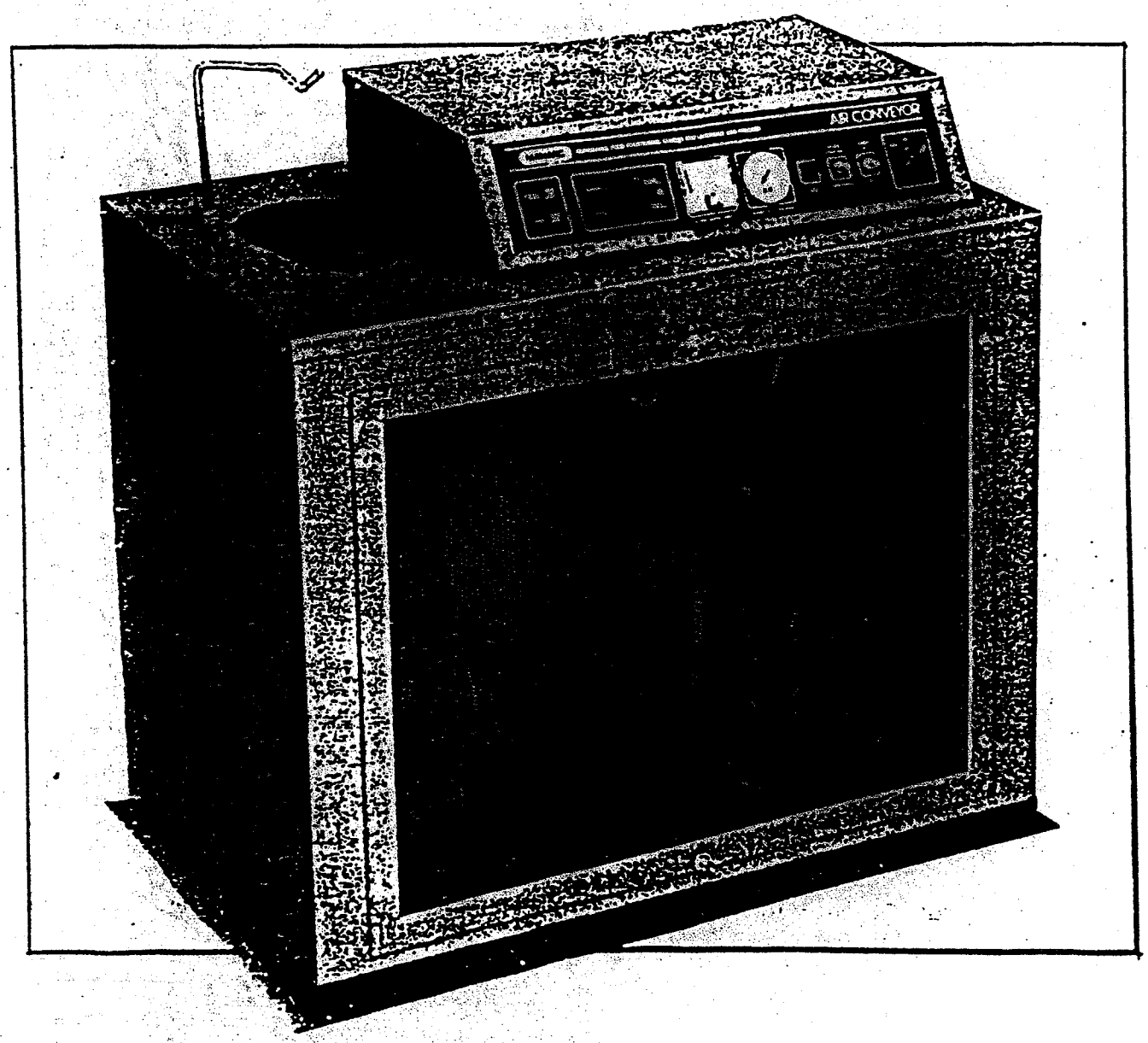

WARRANTY CERTIFICATE

A.T. Ferrell Company warrants each new product of its manufacture when purchased from an authorized representative for a period of one year from the date of shipment. This warranty shall apply to all parts and workmanship (except products of components not manufactured by A. T. Ferrell Company), which shall appear to A. T. Ferrell Company to have been defective in manufacture. A. T. Ferrell Company's sole and entire obligation under such warranty shall be satisfied by shipment to the Purchaser-User, without charge, (except for transportation costs, which shall be paid by Purchaser-User) the part or parts returned (upon request) for inspection and parts intended to replace those acknowledged by A. T. Ferrell Company to be defective. This warranty shall not apply and shall be void under the following conditions:

1. If the product is transported from its original installation site.
2. If any part of the product has been altered, modified or changed, except at A. T. Ferrell Company's factory or is authorized by A. T. Ferrell Company in writing.
3. If attachments or devices unsuitable to the product have been used on or in conjunction with the product.
4. If the product has not been installed, used, operated, handled or serviced in accordance with the appropriate instruction manual.

A.T. Ferrell Company reserves the right to make changes in design or improvements in its products without any obligation whatsoever to prior Purchaser-User of such products.

A.T. Ferrell Company will pass on to a Purchaser-User only such warranty as it shall receive on products or components not of its manufacture from the manufacturer or supplier thereof.

This warranty s expressly in lieu of any other express or implied warranties, including any implied warranty of merchantability of fitness and of any other obligation on the part of A. T. Ferrell Company, and may not be altered, modified or changed in any way except in writing.

A.T. Ferrell Company will not be liable for any consequential damages, loss, or expenses arising in connection with the use or the inability to use the product for any purpose whatsoever. Our maximum liability shall not in any case exceed the cost of replacing defective parts if returned to us within one yar from date of shipment.

The Warranty Registration Card <u>must</u> be filled in completely and signed by Purchaser-User and returned to us to validate any warranty claim.

A.T. Ferrell Company, Inc.
Ossian Operations
713 W. Lafever St.
Ossian, IN 46777

(260) 622-7831
(260) 622-4798 FAX
(800) 537-6260

Safety

Be a safe operator - avoid accidents

Most accidents, whether they occur in industry, on the farm, at home, or on the highway, are caused by the failure of some individual to follow simple and fundamental safety rules or precautions. For this reason, most accidents can be prevented by recognizing the real cause and doing something about it before the accident occurs.

Regardless of the care used in the design and construction of any type of equipment, there are many conditions that can not be completely safe guarded against without interfering with reasonable accessibility and efficient operation.

A careful operator is the best insurance against an accident.

The complete observance of one simple rule would prevent many serious injuries each year. That rule is:

Never attempt to clean, oil, or adjust a machine while it is in motion!
-National Safety Council

BAIC has made every effort to provide safe equipment, however, the following precautions should be carefully observed!

1. Disconnect main service switch before removing any housing covers or electrical boxes or switches.
2. Ground the mill frame according to local electrical codes.
3. Ground any augers or feeders where livestock might contact either augers or feeders.
4. Keep all shields and covers in place.

6. Internal and external rotating parts of the blower and driving equipment can produce serious physical injuries. Do not reach into any opening in the blower while it is operating, or while subject to accidental starting. Cover external moving parts with adequate guards.

7. Internal and external rotating parts of the rotary feeder and driving equipment can produce serious physical injuries. Do not reach into any opening in the rotary feeder while it is operating, or while subject to accidental starting. Cover external moving parts with adequate guards.

8. If blower is operated with piping disconnected, place a strong coarse screen over the inlet and avoid standing in the discharge air stream.

9. Stay clear of the blast from pressure relief valves and the suction area of vacuum relief valves.

10. Avoid extended exposure in close proximity to machinery with high intensity noise levels.

11. Use proper care and good procedures in handling, lifting, installing, operating and maintaining the equipment.

12. Casing pressure must not exceed 25 PSI (172 kPa) gauge. Do not pressurize vented cavities from an external source, nor restrict the vents.

13. Do not use air blowers on explosive or hazardous gases.

14. Other potential hazards to safety may also be associated with operation of this equipment. All personnel working in or passing through the area should be warned by signs and trained to exercise adequate general safety precautions.

AIR SYSTEM ACCESSORIES

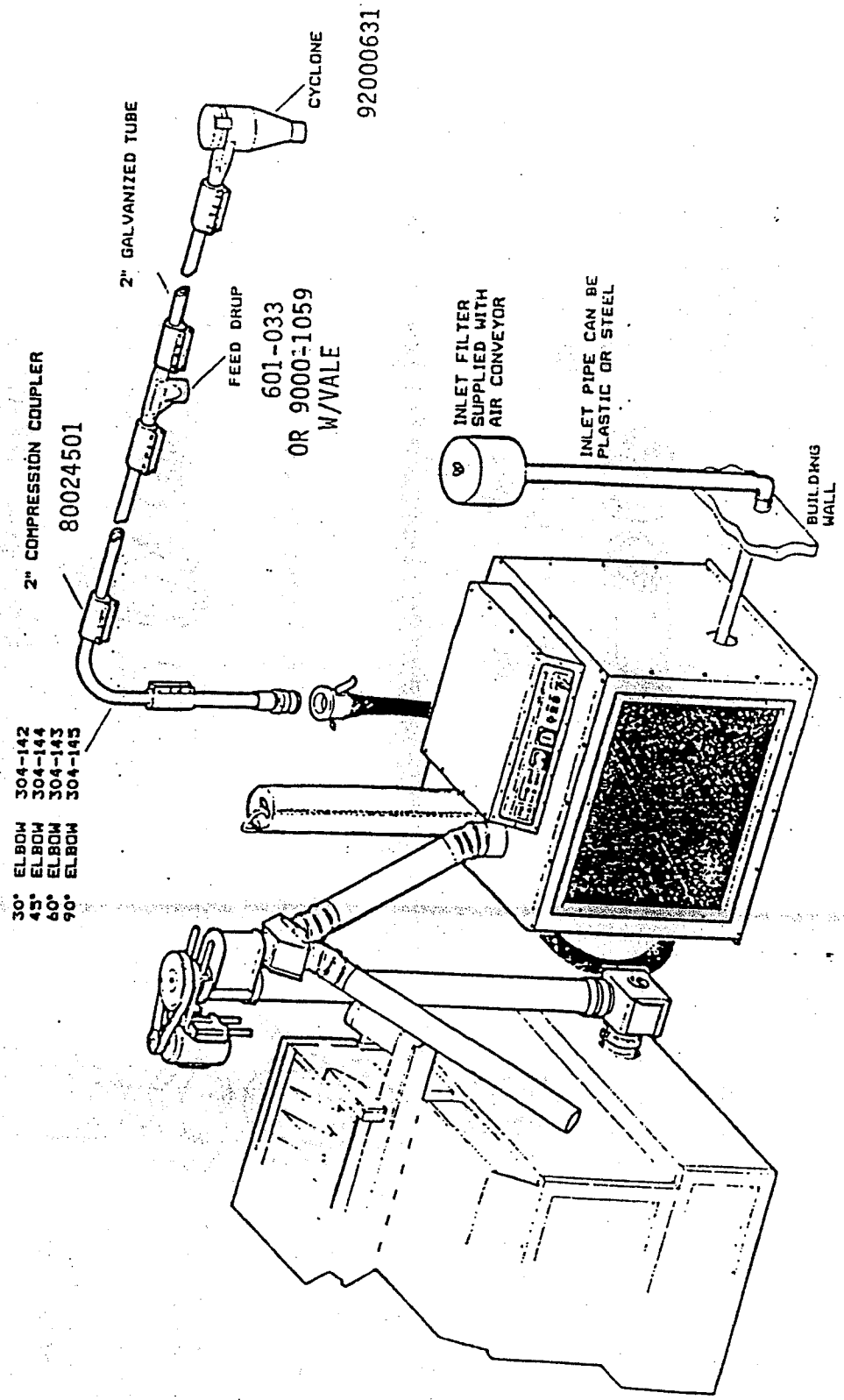

AIR SYSTEM ACCESSORIES

COUPLING INSTALLATION

2" GALVANIZED TUBE

26284944

MALE COUPLER

80025002

FEMALE COUPLER

80025001

2 3/4" MUFFLER CLAMP

70001008

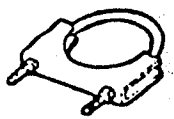

SANDBLAST HOSE

8002-1503

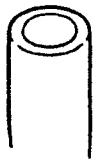

INLET INSTALLATION

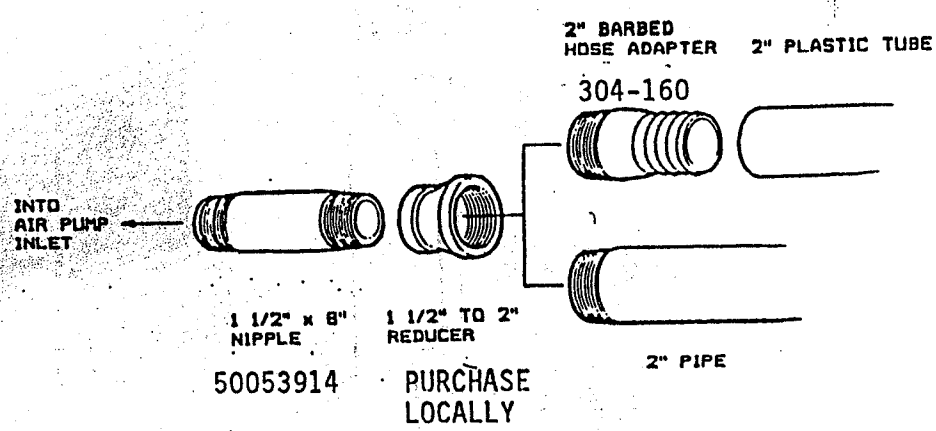

OUTLET INSTALLATION

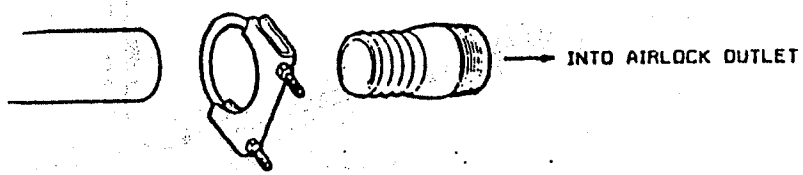

SANDBLAST HOSE	2 3/4" MUFFLER CLAMP	2" BARBED HOSE ADAPTER
80021503	70001008	304-160

COLLECTOR INSTALLATION

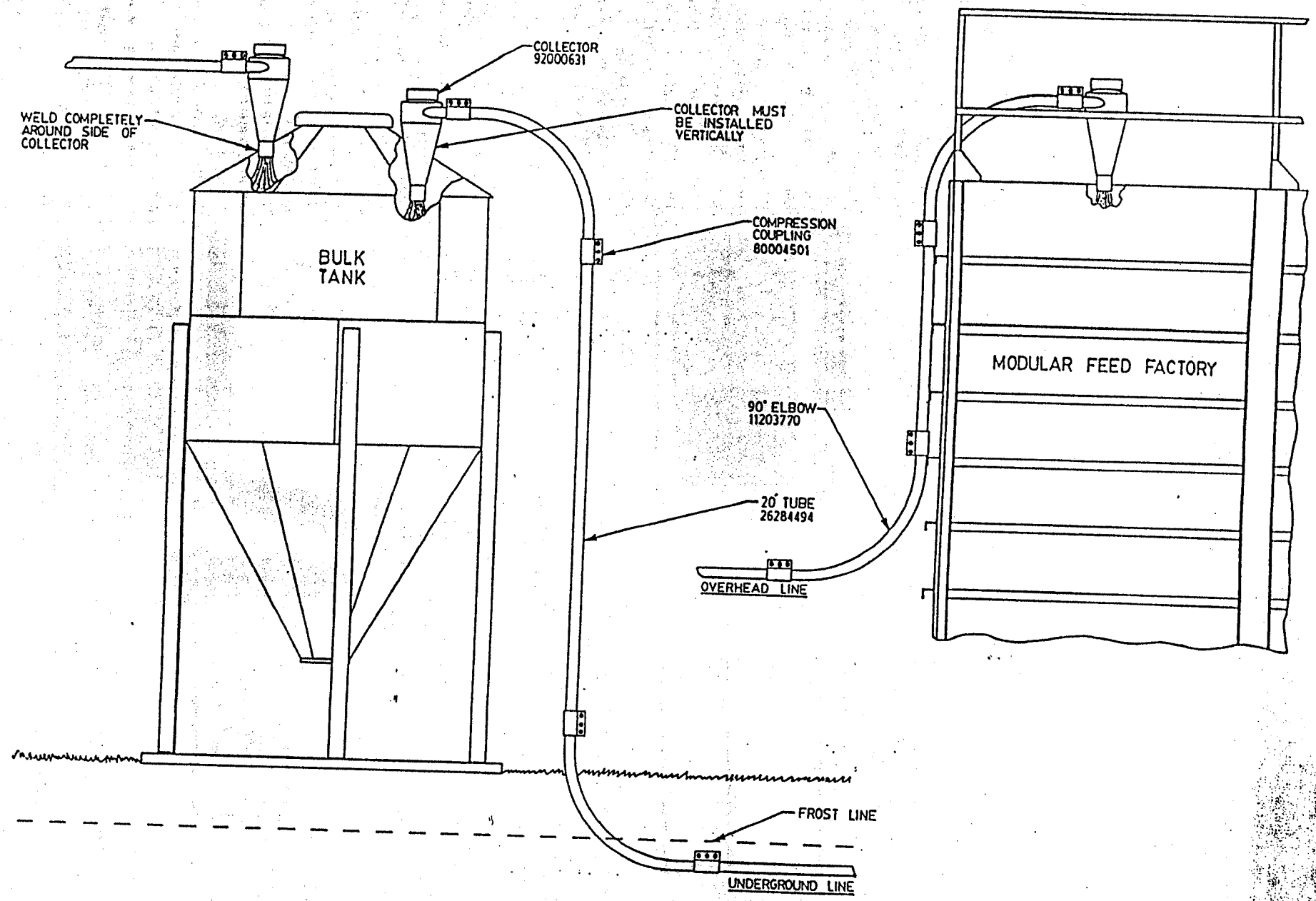

INSTALLATION OF AN AIR CONVEYOR

STEP #1

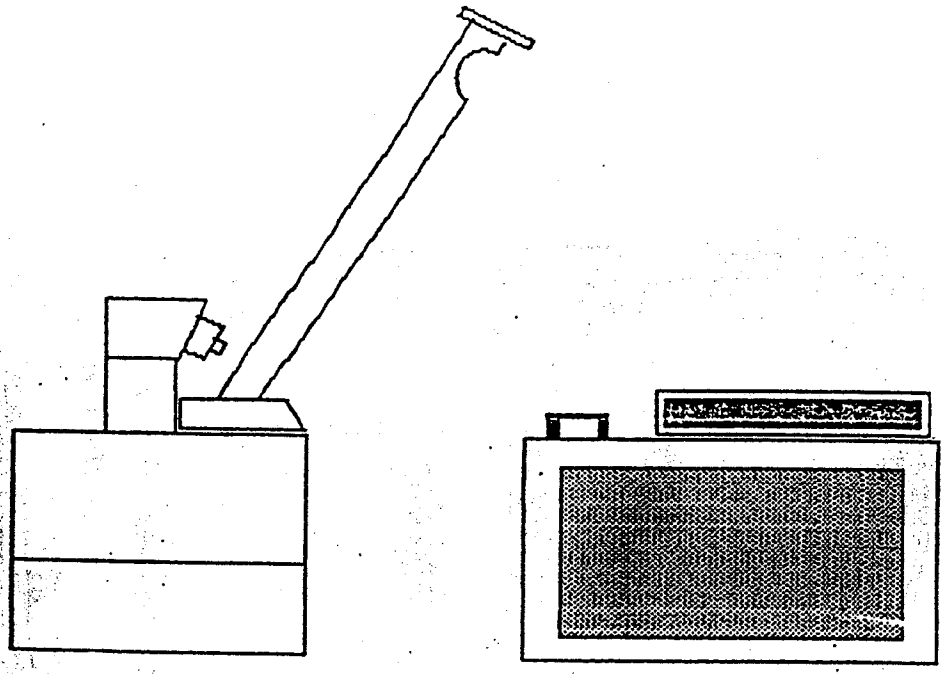

Locate the cabinet style Air Conveyor beside the Feed Processor. The inlet above the air lock on the right (or left) side of the Air Conveyor must be positioned below the outlet on the vertical auger on the Feed Processor. The distance away from the outlet must allow the feed to drop freely from the outlet into the inlet of the Air Conveyor. The Feed Processor panel and the Air Conveyor panel should be easily seen standing in front of the Feed Processor.

STEP #2

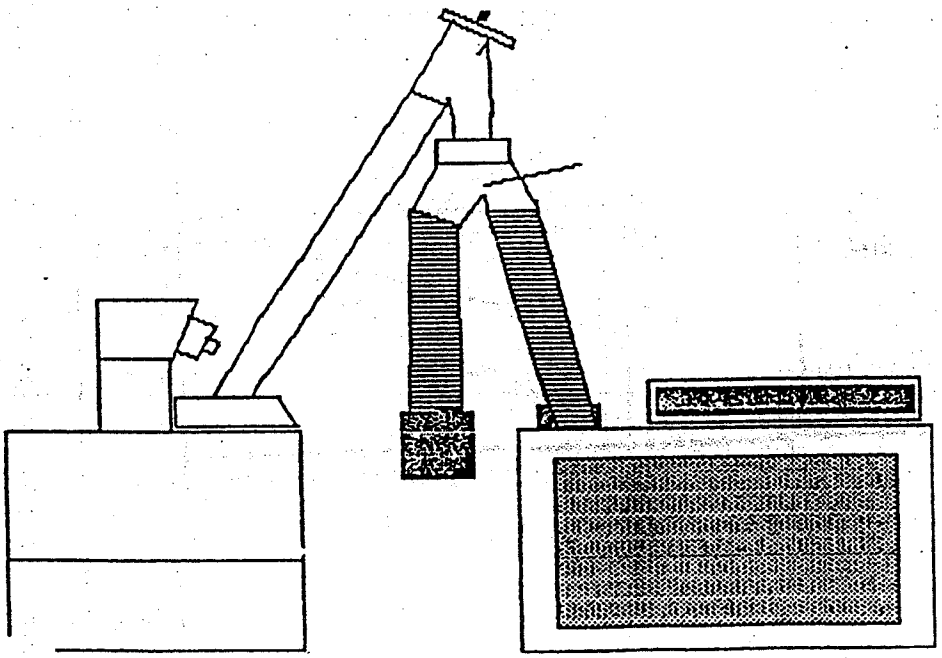

Attach the outlet, "Y" control and pipe as illustrated. Fasten the increaser switch to the flex on the auxiliary side of the "Y" control. This provides an auto shut off when not blowing feed. Seal all openings around attachments with caulking when completed. A 6" to 4" reducer is required when using a 6" discharge on the Feed Processor to direct feed into the 4" inlet on the Air Conveyor.

INSTALLATION OF AN AIR CONVEYOR

STEP #3

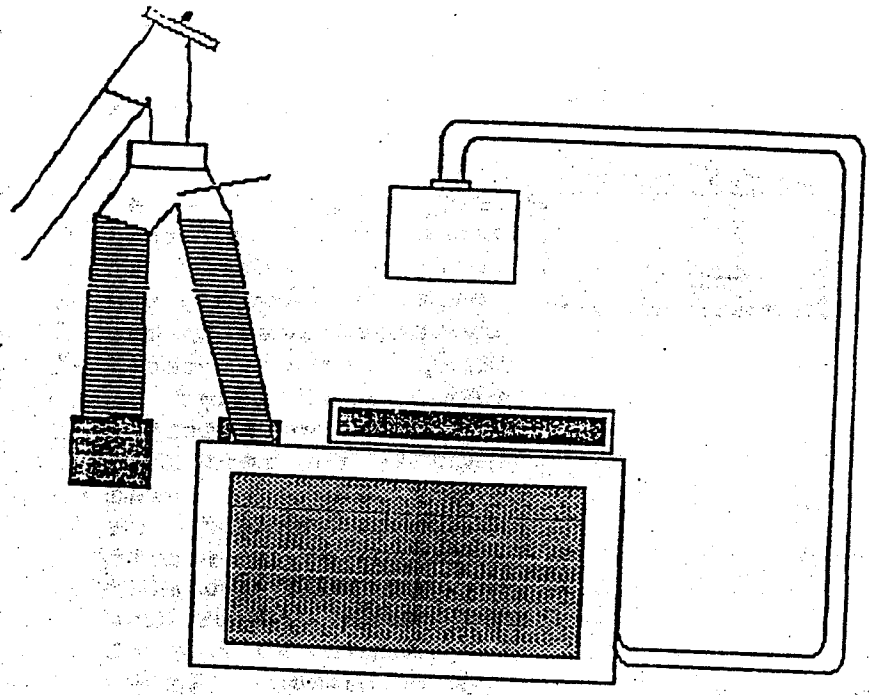

Install the 2" air intake pipe on the air pump side of the Air Conveyor. The pipe must be steel for a length of 3' from the air pump. The air pump develops heat and will melt the plastic pipe. After the 3' length, the pipe can be plastic. The intake should be located outside the feed room providing fresh clean air to the air pump. The air filter should be installed at a height it can be easily reached from the ground for cleaning.

STEP #4

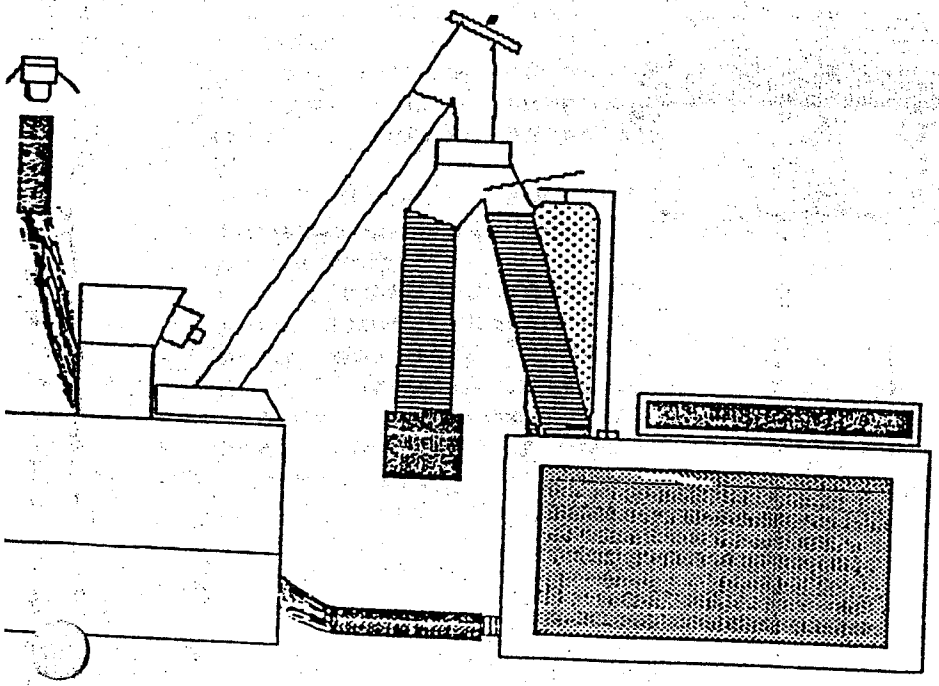

Attach the 2" barbed hose adaptor into the airlock outlet. Fasten the required sandblast hose to the hose adaptor using a muffler clamp. Fasten a female quick coupler to the other end of the sandblast hose using a muffler clamp. The length of the sandblast hose should curve to where the steel pipes are to be located. Avoid sharp curves in the sandblast hose.

INSTALLATION OF AN AIR CONVEYOR

STEP #5

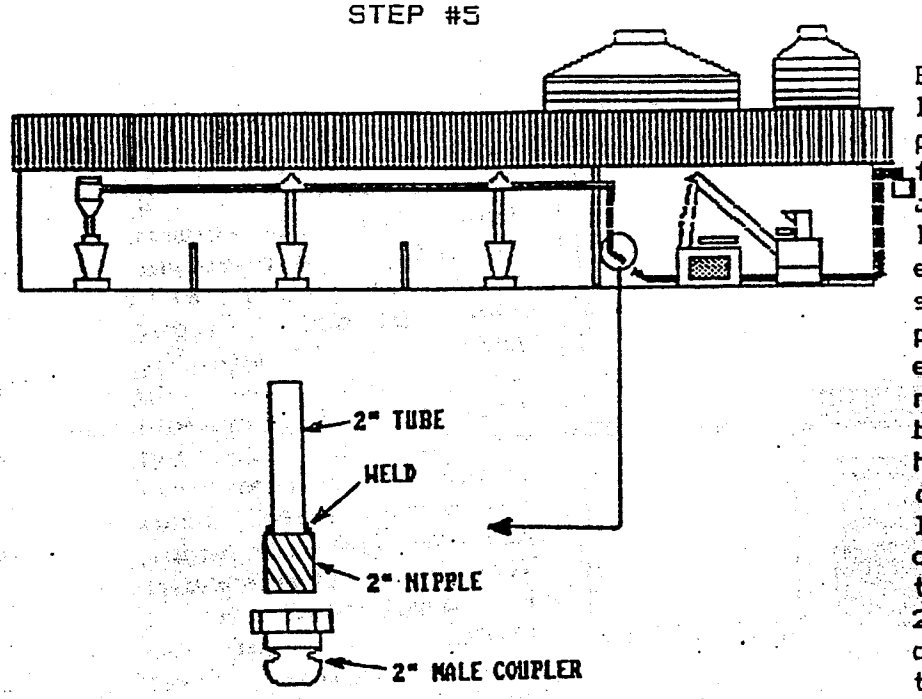

Evaluate the best location for the pipes to enter the feed room. A 45 degree elbow at this location makes it easier to attach the sandblast hose to the pipe. The steel elbow also helps to not wear at possible bend in the sandblast hose. The male coupler should be located at a height on the wall suitable to reach. Weld the 2" nipple to the 45 degree elbow. Screw the 2" male coupler to the 2" nipple.

STEP #6

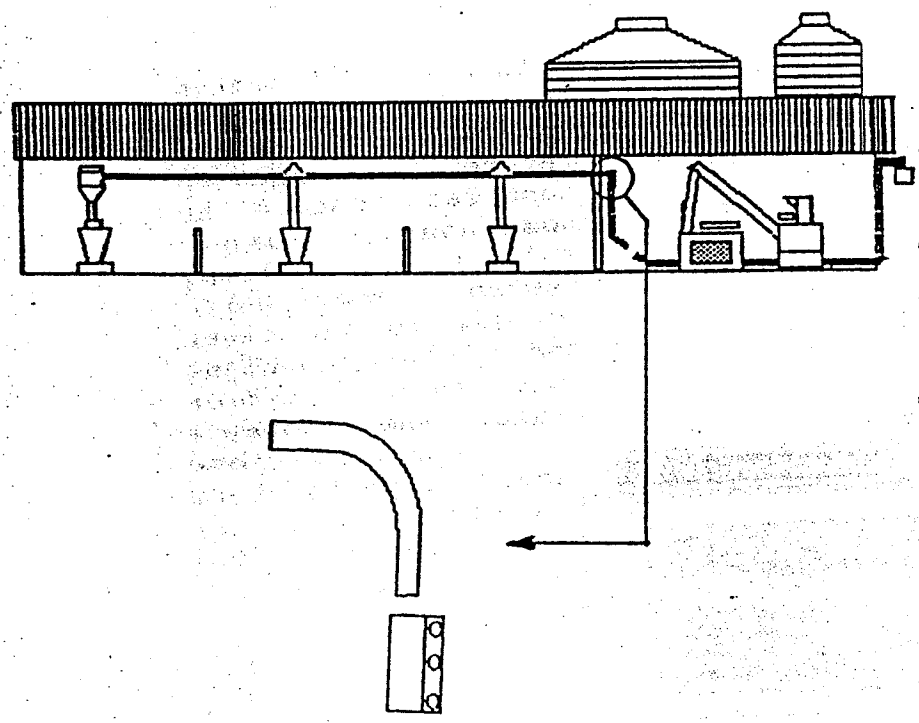

Install the elbow to the 2" pipe. Cut the pipe the correct length between the 45 degree elbow and 90 degree elbow. Join the pipe to the elbows using the compression couplers. The compression couplers should be centered length ways where the two pipe join. Tighten the compression coupler by tightening each bolt a little at a time. Fasten the pipe to the wall using a 2" "C" clamp.

INSTALLATION OF AN AIR CONVEYOR

STEP #7

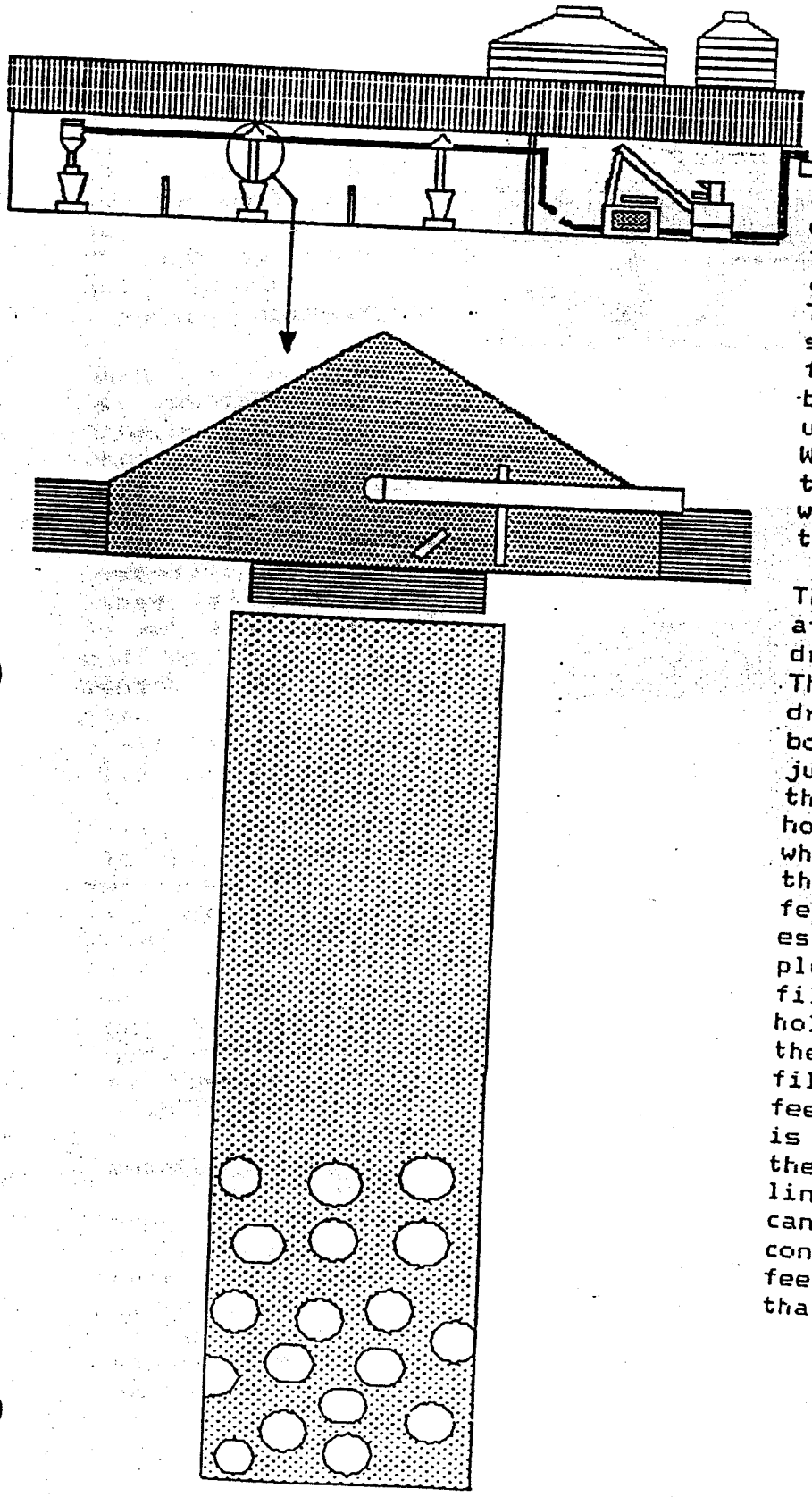

The illustration of a feed drop also includes the down pipe. The feed drop allows feed to fill a reservoir and then continue to blow feed down line. The feed drop is attached to the 2" line using compression couplers. The feed drop can be set to deliver the feed to that location by turning the handle up as illustrated. When the handle is turned down the feed will not be delivered to that location.

The 4" pipe is attached to the feed drop using screws. There must be holes drilled into the bottom of the pipe just below the top of the feeder. These holes let air escape when the feed reaches that height in the feeder. When the air escapes, the holes plug with feed while filling. When the holes are plugged, the feed continues to fill the pipe to the feed drop. The feed is then carried over the 4" pipe down the line. The 4" pipes can be adjustable to control the amount of feed delivered to that reservoir.

INSTALLATION OF AN AIR CONVEYOR

STEP #8

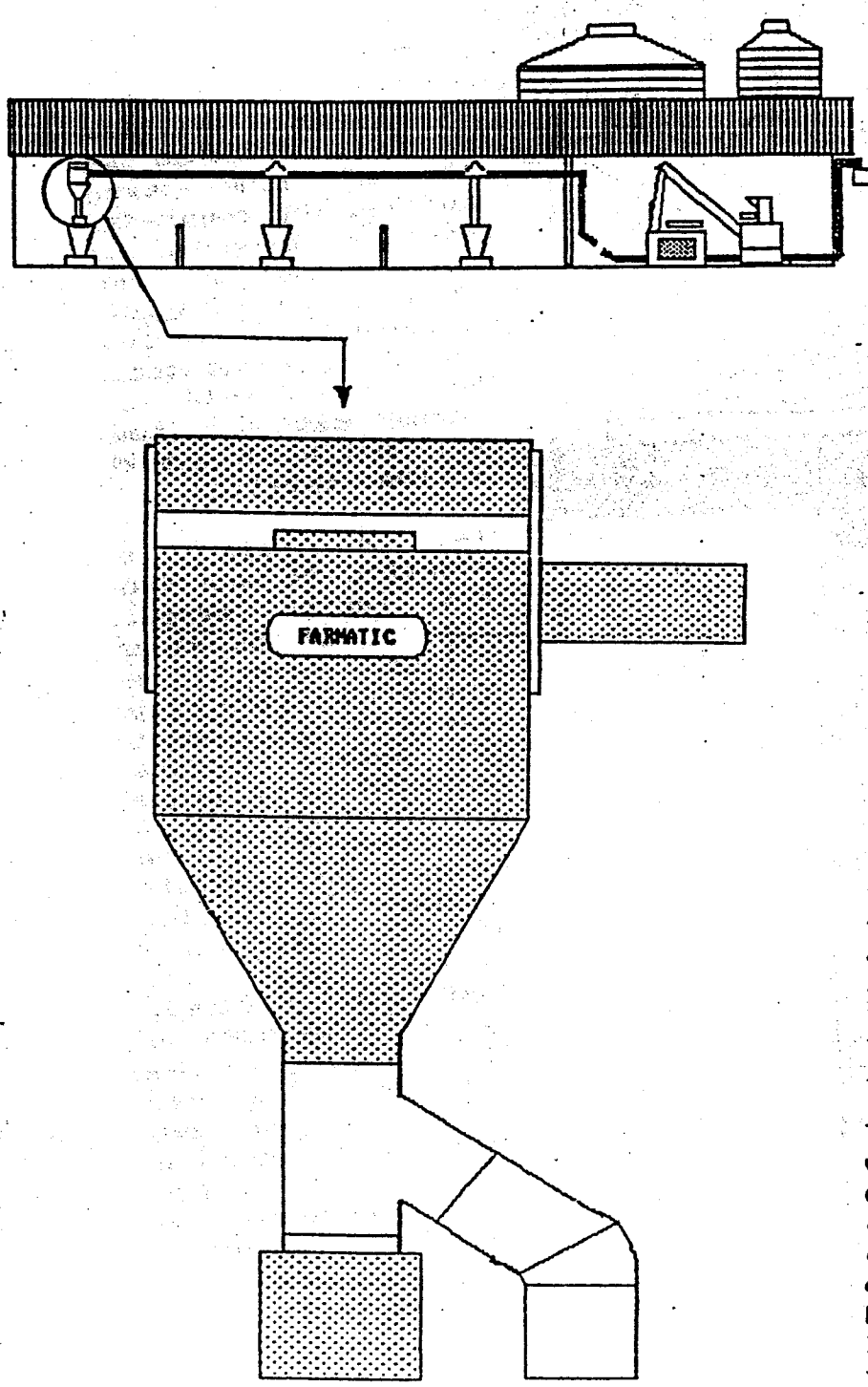

The illustration of the cyclone is situated at the end of a line. This allows feed to separate from the air stream. It is fastened to the 2" line using a compression coupler.

A length of 4" pipe can be fastened to the cyclone to direct feed to that location. An auto shut off at the bottom of the pipe using a 4" increaser with switch is used. The pipe must be a minimum of 2' for the system to purge before the air conveyor turns off. If the ceiling will not allow a 2' length, the feed will blow out the top of the cyclone when the feeder or bin is full. In this situation you must add a "Y" as illustrated for the feed to dispense when the Air Conveyor is in the purge cycle.

The complete system with pipe, feed drops and cyclones can be hung from the ceiling with chains or brackets. Avoid having the system to low for the customer to get into the hog pens.

INSTALLATION OF AN AIR CONVEYOR

THE CORRECT INSTALLATION OF A COMPRESSION COUPLER

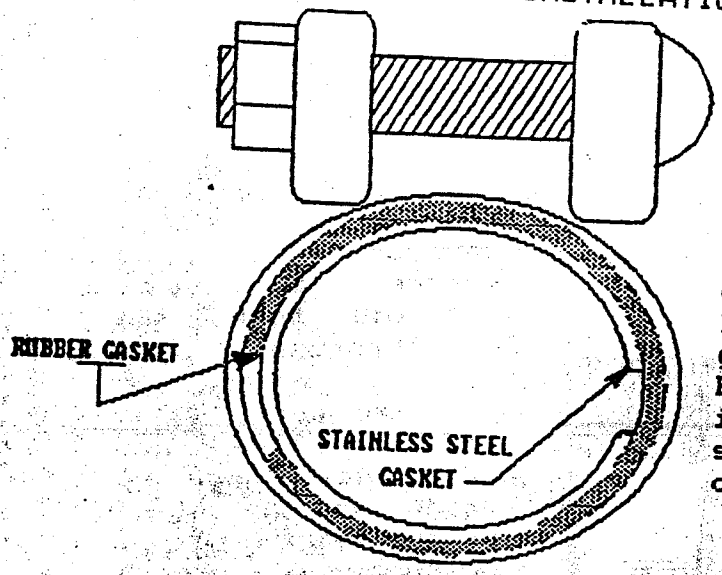

The illustration is the end view of a compression coupler. The compression coupler has a steel band on the outside that slides as bolt is tightened. Inside this steel band is a rubber gasket and inside the rubber gasket a stainless steel gasket. It is important to locate the gaskets to assure a good seal. Each gasket enterlocks with itself when it is tightened. Be sure the enterlocks for each are opposite other as illustrated.

OUTLET INSTALLATION

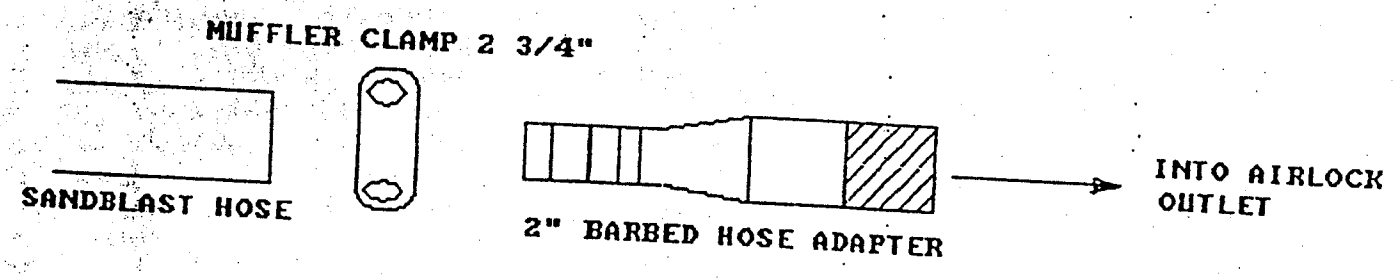

INLET INSTALLATION

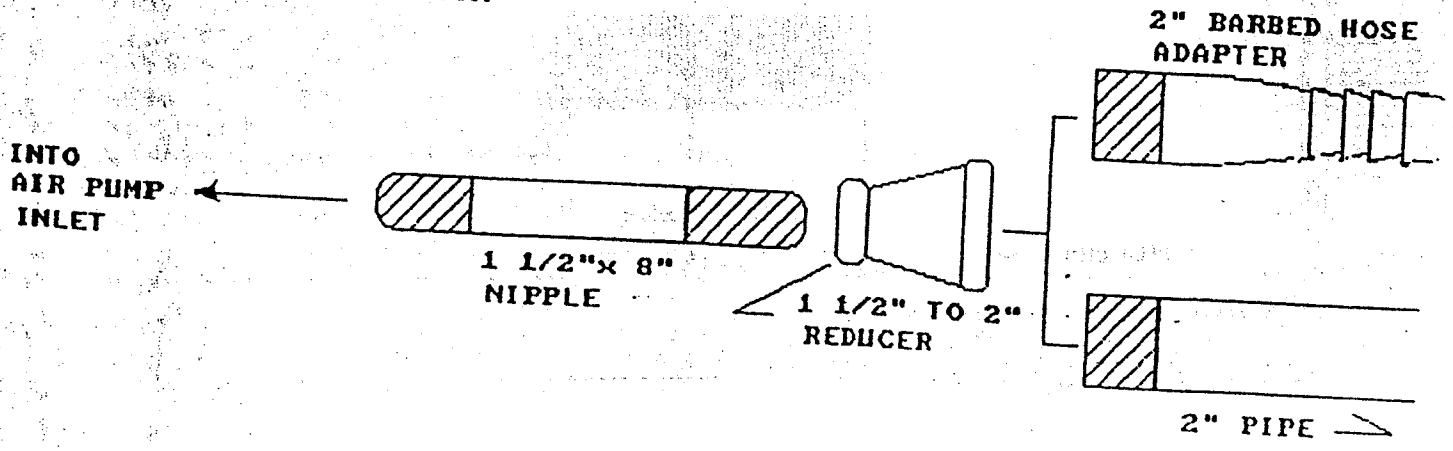

AIR CONVEYOR SYSTEMS

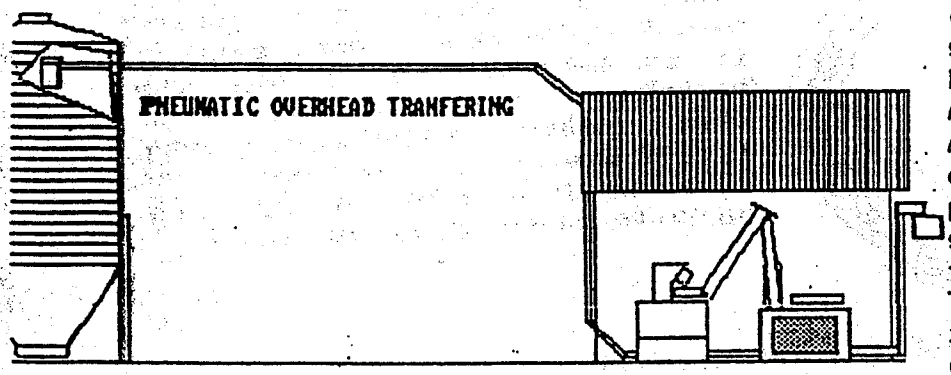

An example of blowing finished feed into new or existing bulk feed tanks. The system can transfer up to 1400 feet away from the Air Conveyor. The cyclone with auto shut off turns the Feed Processor off. After 40 seconds the Air Conveyor shut off. The lines are purged for these 40 seconds to be clean for the next feeding. The number of corners is limitless with the convenience of pneumatic conveying. Air Conveyors are useful in Dairy barns for delivering to bulk bins used for computer feed stations.

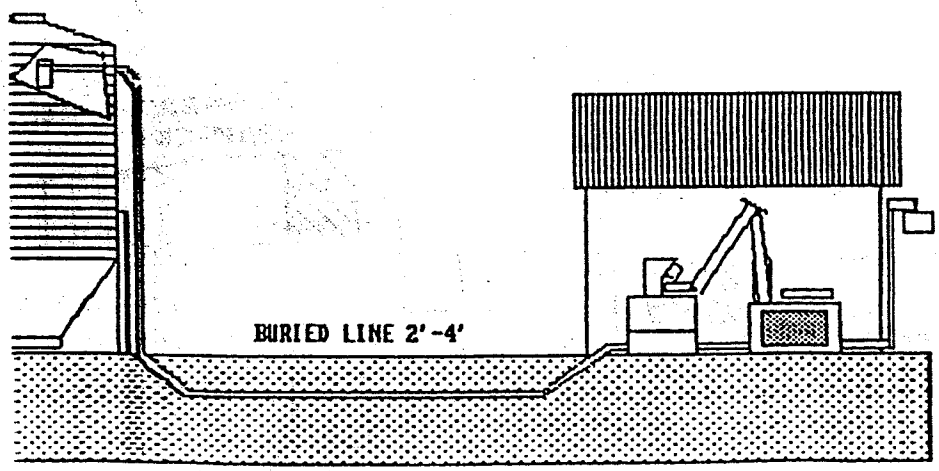

Transferring feed below ground. This system eliminates overhead obstructions. Very popular for road ways and heavy traffic areas. The pipe should be buried 4' below heavy traffic areas and 2' below other wise. It is recommended to use 2" water pipe threaded together verses tubing and couplers under the ground.

Assembly--

1. Locate the blower unit so as to provide the closet connection to the branch tubes and the mill discharge auger. Accessability for service should also be provided.
2. Connect the mill dischare to 3-7/8" inlet spout on the feeder for material input. Use Light-gauge or flex downspout for this connection
3. Air Cleaner- To cut down on the amount of sound emitted from the Feed Pump, it is recommended that the air cleaner be piped to the outside of the building. This will provide cleaner inlet air to the filter and provide for quieter operation.
4. Piping Connections- Cut all of the branch tubes square and deburr the ends of the tubing. Install a male coupling (8002-5002) to each branch tube. Connect one end of the flexible hose to the discharge pipe of the feeder unit. Always clamp the hose securely with a hose clamp. Cut the flexible hose to a lenght required to reach all of the branch tubes. Do not make sharp turns with the flexible hose and allow for the contraction of the hose during the winter months. For the final assembly procedure, attach a female quick coupling (8002-5001) to the flexible hose and attach securely with a hose clamp.
5. Transport System- When laying out the transport tubing, all of the tubes (horizontal, vertical, and elbows) have different valves in determining the "effective lenght" of run. (See Page 1) Make sure that all tubes are secured tightly and that all joints are airtight.
6. Collectors must be installed vertically. They are easily connected with compression couplings.
7. Run a set of control wires from the Feed Pump panel to the mill panel.
8. Bring in power leads from the power source and connect them to the terminal block.

OPERATION

Routine:

After the mill and air system are installed and wired, they should be checked for proper adjustment and operation. The following steps will aid you in the startup procedures.

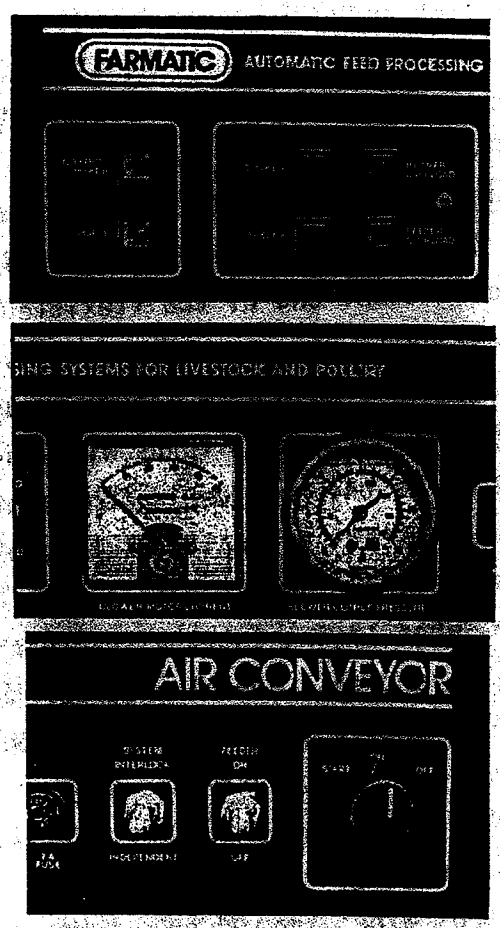

Controls Check:

1. Turn on power.
2. Set the "System" switch to "Independent" and the "Feeder" switch to the "Off" position.
3. Push the "Start" switch. The blower should start and run continuously. Check rotation of the motor and blower for proper operation. If incorrect, change rotation as indicated on blower housing.
4. Check the pressure-switch setting by slowly closing the end of the flexible hose. The pressure switch should shut down the unit at 6.5 PSI-5HP 9.5 PSI - 7.5HP and 12.5 PSI-10 HP.

5. Shut down the unit with the "Stop" switch. Reset the "System" switch to the "Interlock" position.
6. Restart the unit. The "Purge" light should remain lit for twenty (20) seconds.
7. Resart the unit. The mill should not start until the "Purge" light is off.
8. turn off the mill. The air system should run for approximately 40 seconds and then shut down.
9. If the air system and mill do not operate properly, recheck the wiring and repeat Steps 5 through 7.

Start Procedure:

1. Set the mill for the desired operating sequence.
2. Make sure that the air unit is connected to the proper branch (tube circuit) and that the proper Bin Level Switch is ativated, if these are used.
3. Set the "System" switch to the "Interlock" position and the "Feeder" switch to the "On" position.
4. Push the "Start" switch to start the Feed Pump.
5. After the amber "Purge" light goes off, start the mill.
6. Adjust the mill-load dial until the air system gauge indicates 1-1 1/2 LBS below cut out pressure for HP of system for optimum operating efficiency.

Normal Shutdown Procedure (Manual):

1. For normal shutdown procedure, depress red "Stop" button on the mill panel. The Feed Pump unit will run for an additional 40 seconds to clean the lines.
2. To instantly stop both units, depress the red "Stop" button on the Feed Pump control panel.

Automatic Shutdown (Create by a break in the safety circuit):

1. If any automatic device within the mill circuit drops out the Mixer-Grinder will shut down. The Feed Pump unit will operate for the required 40 seconds and then shut down.

   Note: Within that 40 second period, the mill may be resarted, provided its circuitry is clear.

Independent Operation:

1. Place the selector switch in the "Independent" position.
2. The mill and the Feed Pump can now operate independently of each other.

Note: The saftey circuits of each components piece of machinery are still intact.

Plugged Lines:

1. Place the selector switch in "Independent" position.
2. Place the "Feeder" switch in the "Off" position.
3. Start the blower.
4. If the line does not unplug, within two or three starts, disconnect the 2" rubber hose from the plugged line and then reconnect it to plugged line while running (repeat this process 5 to 6 times). If the line still does not unplug, it will be necessary to separte the lines and blow out short sections.

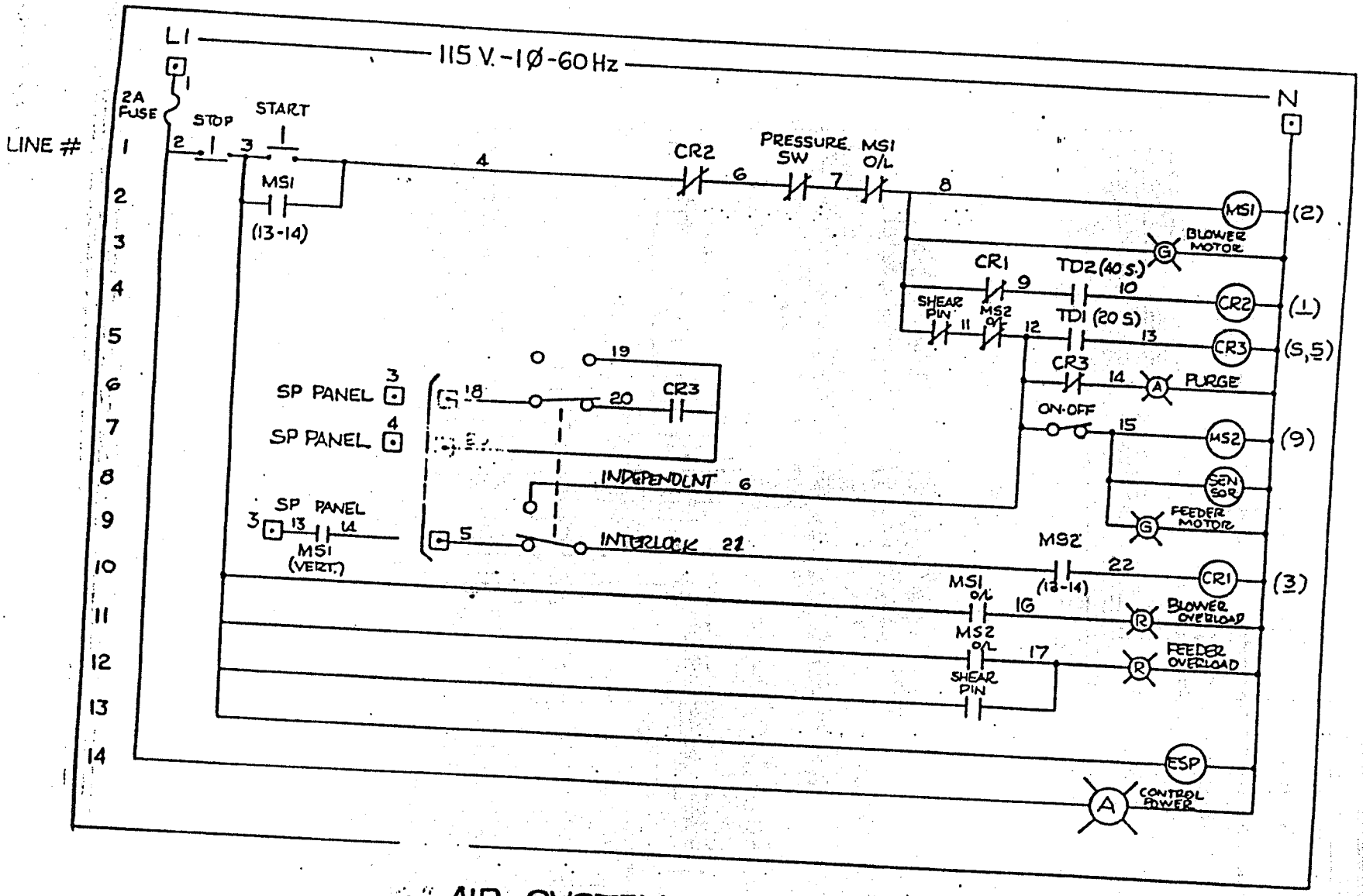

AIR SYSTEM WIRING DIAGRAM
FARMATIC, INC. SEPT. 01, 1986

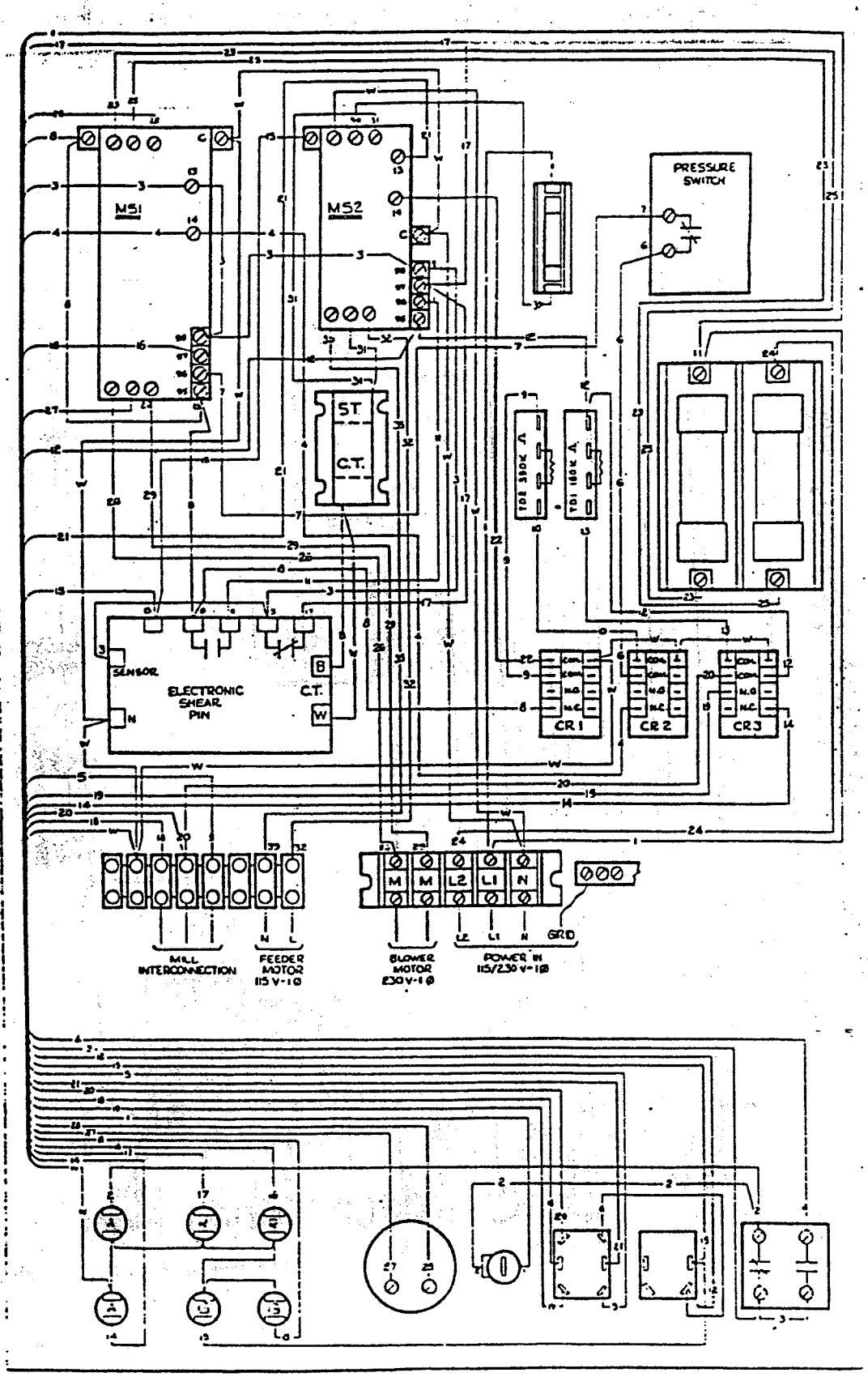
MS1
MS2
PRESSURE SWITCH
ST
C.T.
SENSOR
ELECTRONIC SHEAR PIN
B
C.T.
W
N
CR1
CR2
CR3
M
M
L2
L1
N
GRD
MILL INTERCONNECTION
FEEDER MOTOR 115V-1Ø
BLOWER MOTOR 230V-1Ø
POWER IN 115/230V-1Ø

Cabinet style pneumatic panel 2" to electronic panel Sentry

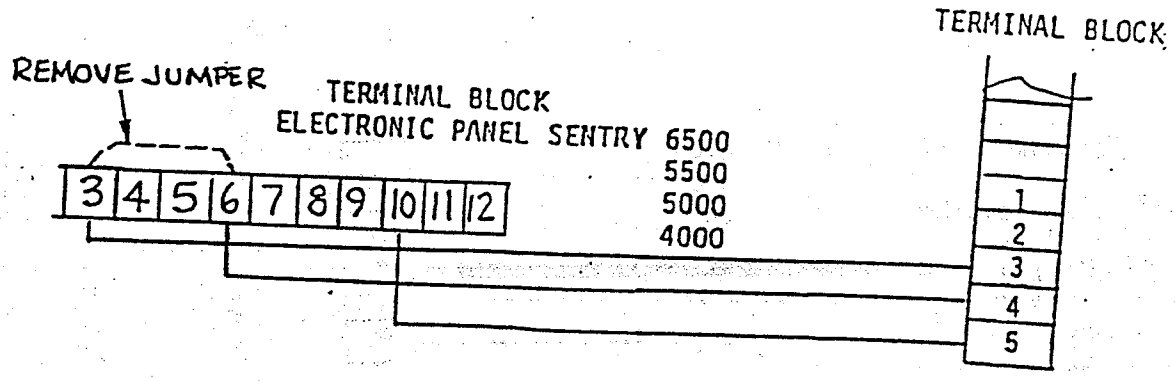

Jumper must be installed between 15 amp fuses load side line 1 and terminal 9 in mill panel

NOTE: Be certain that L1 of mill and L1 of air conveyor are on the same line. Damage to panel components will result if voltage difference between L1 of mill and L1 of air conveyor is 230 volts.

Cabinet style pneumatic panel 2" to electric panel Sentry

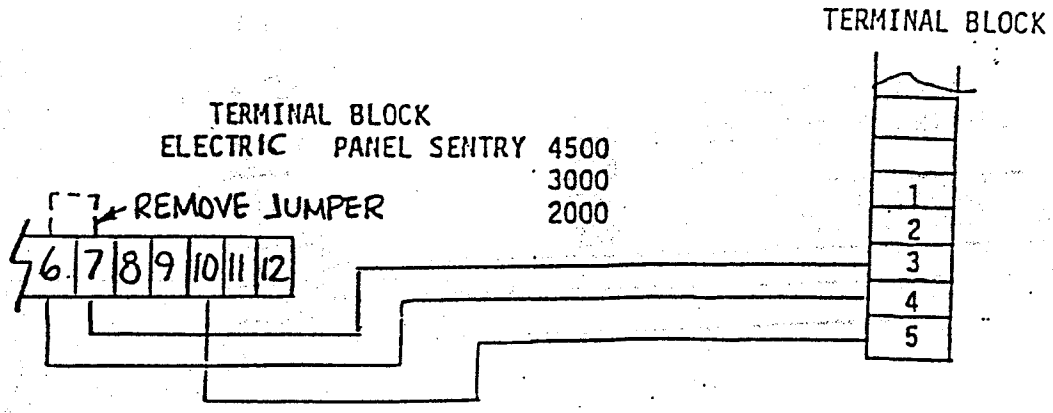

Jumper must be installed between 15 amp fuses load side line 1 and terminal 9 in mill panel

NOTE: Be certain that L1 of mill and L1 of air conveyor are on the same line. Damage to panel components will result if voltage difference between L1 of mill and L1 of air conveyor is 230 volts.

ELECTRICAL INTERCONNECTION OF FARMATIC AIR CONVEYOR TO FARMATIC (MP/RMP) MILL

1. REMOVE JUMPER FROM 26 TO 25.
2. REWIRE SMALL MOTOR - PROPORTIONER, BASE OR VERTICAL - TO 115V.
3. INSTALL WIRING BETWEEN MILL PANEL AND AIR CONVEYOR PANEL AS FOLLOWS;
   - MILL TERMINAL #26 TO AIR CONVEYOR WIRE #18 (16 ga. AWG. MIN.)
   - MILL TERMINAL #25 TO AIR CONVEYOR WIRE #20 (16 ga. AWG. MIN.)
   - MILL TERMINAL #3, 5 OR 7 FROM MOTOR REWIRED TO 110V TO AIR CONVEYOR WIRE #5 (16 ga. AWG. MIN.)

NOTE:
BE CERTAIN THAT 'L1' OF MILL AND 'L1' OF AIR CONVEYOR ARE ON THE SAME LINE! DAMAGE TO PANEL COMPONENTS WILL RESULT IF VOLTAGE DIFFERENCE BETWEEN 'L1' OF MILL AND 'L1' OF AIR CONVEYOR IS 230V.

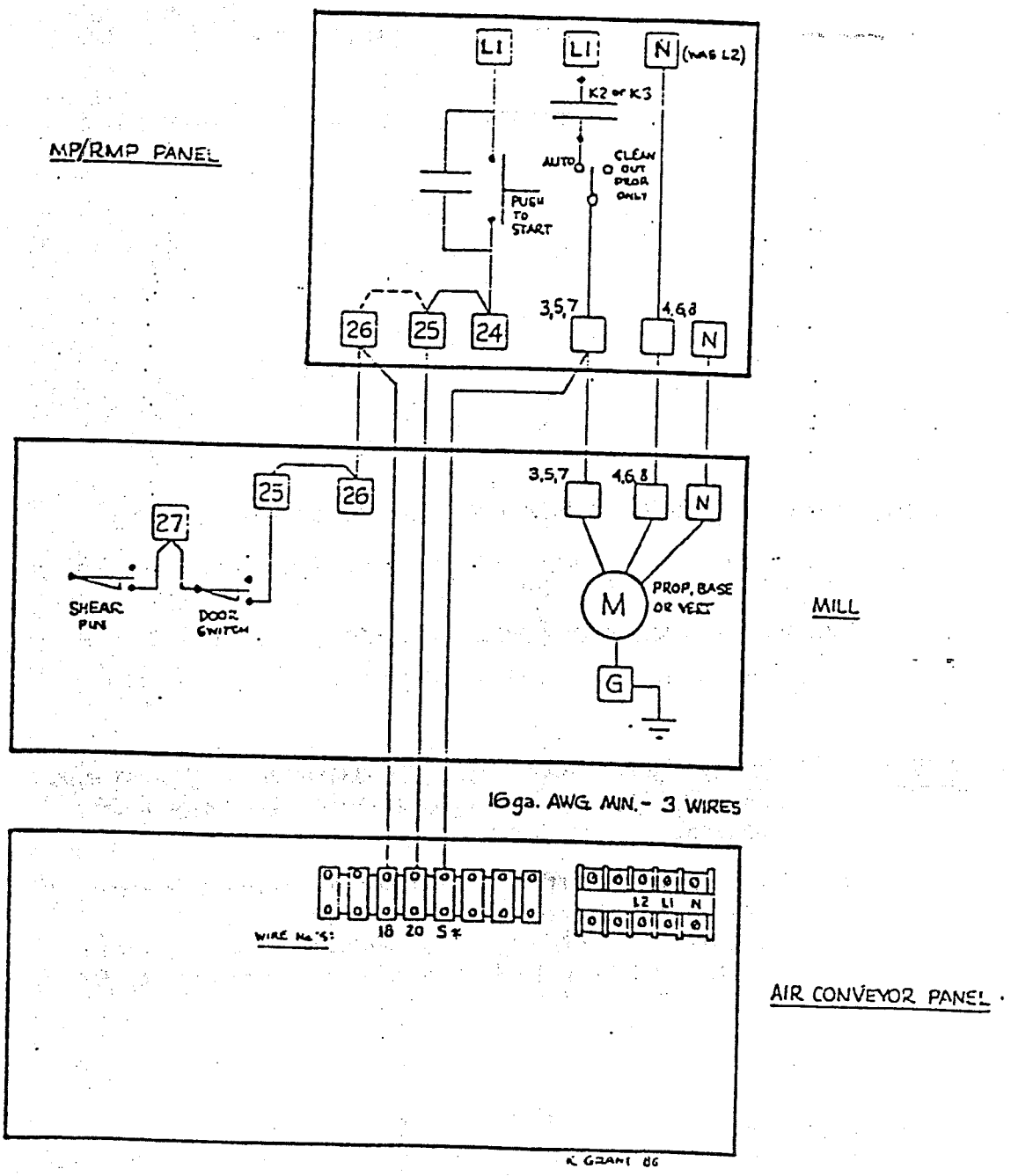

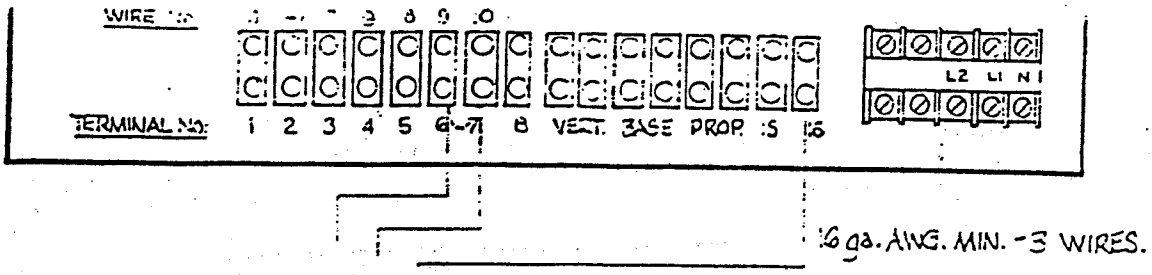

② INSTALL JUMPER FROM WIRE No. 4 TO TERMINAL No. 15.

③ INSTALL WIRING BETWEEN MILL PANEL AND AIR CONVEYOR PANEL AS FOLLOWS:
- MILL WIRE #9 TO AIR CONVEYOR WIRE #18 (16ga. AWG. MIN.)
- MILL WIRE #10 TO AIR CONVEYOR WIRE #20 (16 ga AWG. MIN.)
- MILL TERMINAL #16 TO AIR CONVEYOR WIRE #5 (16ga. AWG. MIN.)

NOTE:

① BE CERTAIN THAT MILL TERMINALS #15 AND #16 ARE CONNECTED TO AUXILIARY TERMINALS OF VERTICAL CONTACTOR.

② BE CERTAIN THAT 'L1' OF MILL AND 'L1' OF AIR CONVEYOR ARE ON THE SAME LINE! DAMAGE TO THE PANEL COMPONENTS WILL RESULT IF VOLTAGE DIFFERENCE BETWEEN 'L1' OF MILL AND 'L1' OF AIR CONVEYOR IS 230 V.

* WAS WIRE No 21 PRIOR TO AUG. 15, 1956.

ELECTRICAL INTERCONNECTION OF FARMATIC AIR CONVEYOR TO FARMATIC ELECTRONIC (EMP) MILL

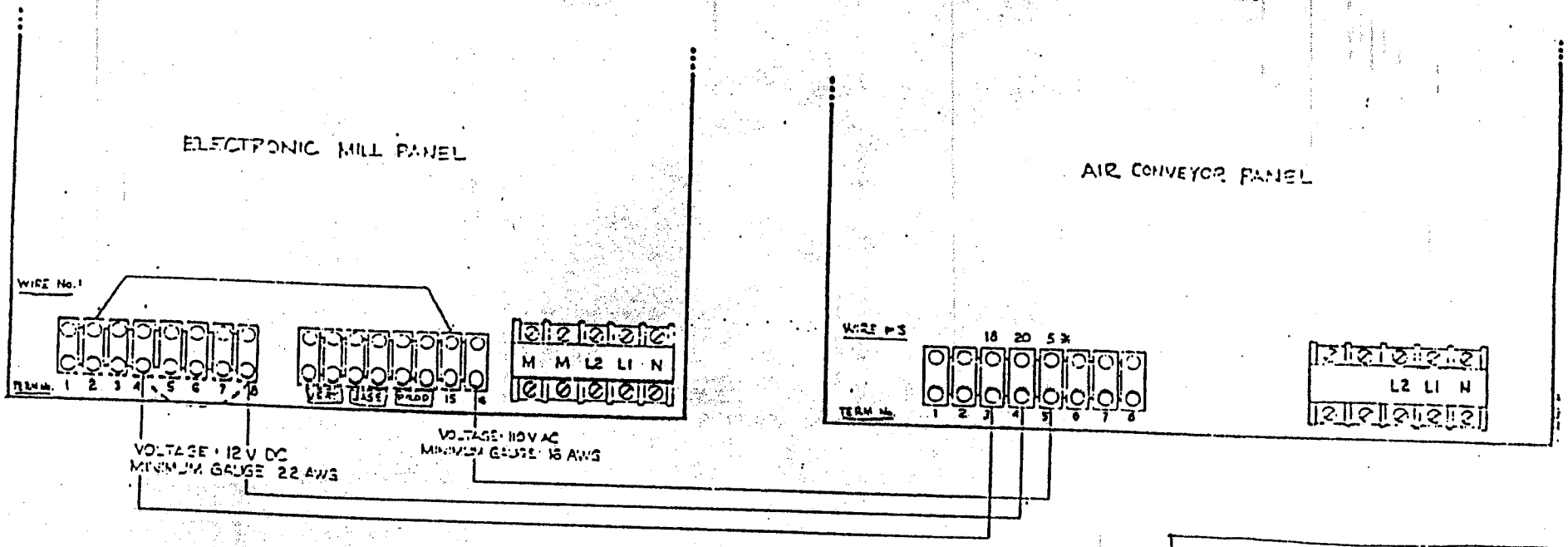

① REMOVE JUMPER BETWEEN TERMINALS 4 & 8 ON MILL PANEL.
② INSTALL JUMPER (16 GA. AWG) BETWEEN TERMINALS 2 & 15 ON MILL PANEL.
③ INSTALL WIRING BETWEEN MILL PANEL AND AIR CONVEYOR PANEL AS FOLLOWS:

- MILL TERMINAL #4 TO AIR SYSTEM WIRE No. 18 (22 GA. AWG MIN.)
- MILL TERMINAL #8 TO AIR SYSTEM WIRE No. 20 (22 GA AWG MIN.)
- MILL TERMINAL #16 TO AIR SYSTEM WIRE No. 5 * (16 GA AWG MIN.)

NOTE: BE CERTAIN THAT L1 OF MILL AND L1 OF AIR CONVEYOR ARE ON THE SAME LINE! DAMAGE TO PANEL COMPONENTS WILL RESULT IF VOLTAGE DIFFERENCE BETWEEN L1 OF MILL AND L1 OF AIR CONVEYOR IS 230 VOLTS.

* WAS WIRE No 21 PRIOR TO AUG 15, 1956.

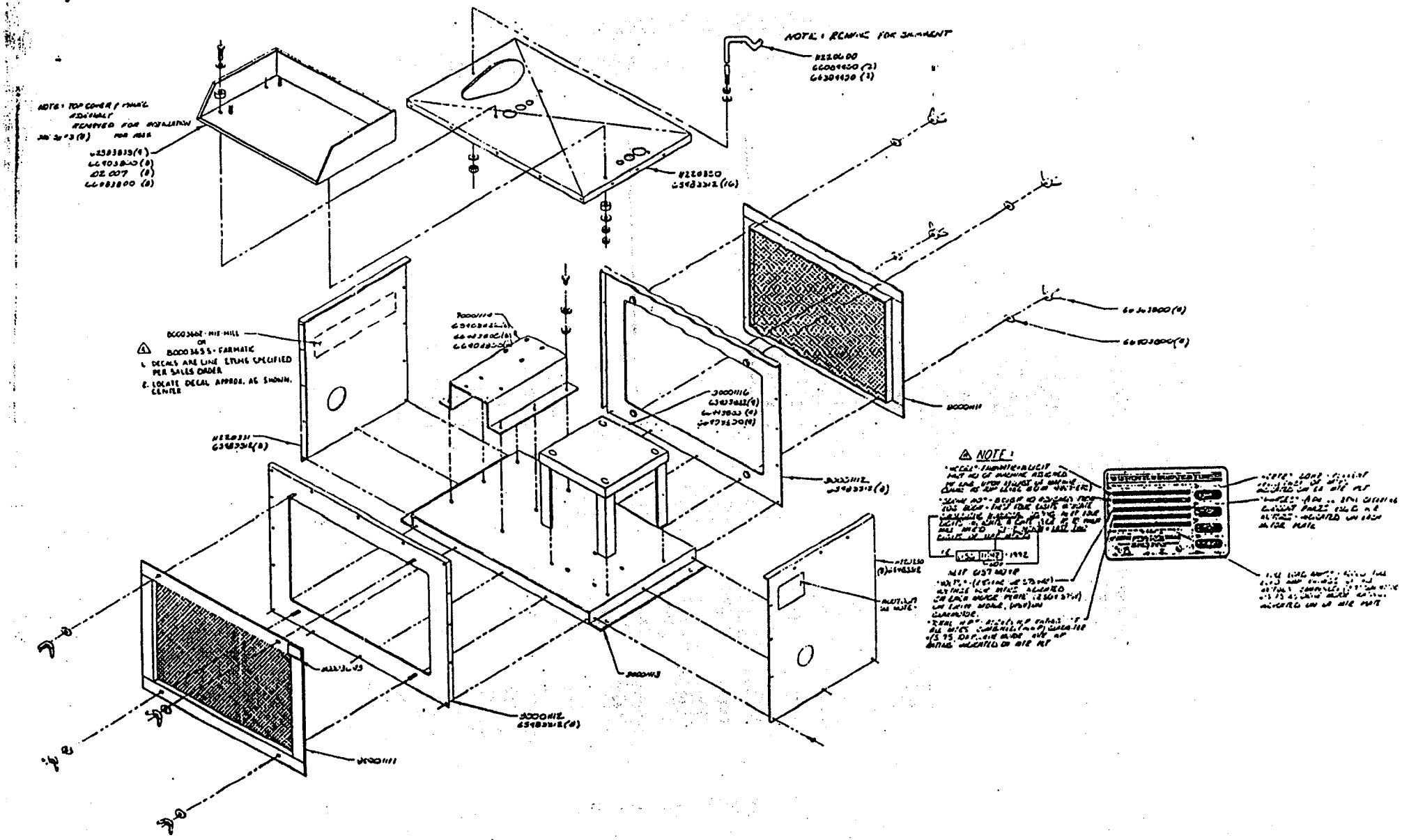
NOTE: RENEW FOR SHIPMENT
NOTE: TOP COVER / PANEL ASSEMBLY REMOVED FOR INSTALLATION
DECALS ARE LINE LENGTH SPECIFIED PER SALES ORDER
LOCATE DECAL APPROX. AS SHOWN, CENTER
NOTE:

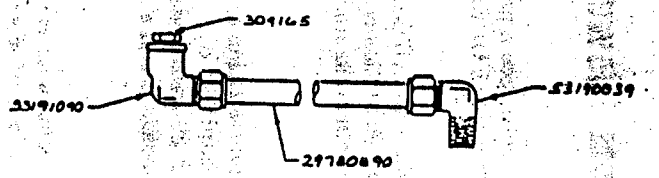

NOTE: UNI FILL TUBE ASSEMBLY

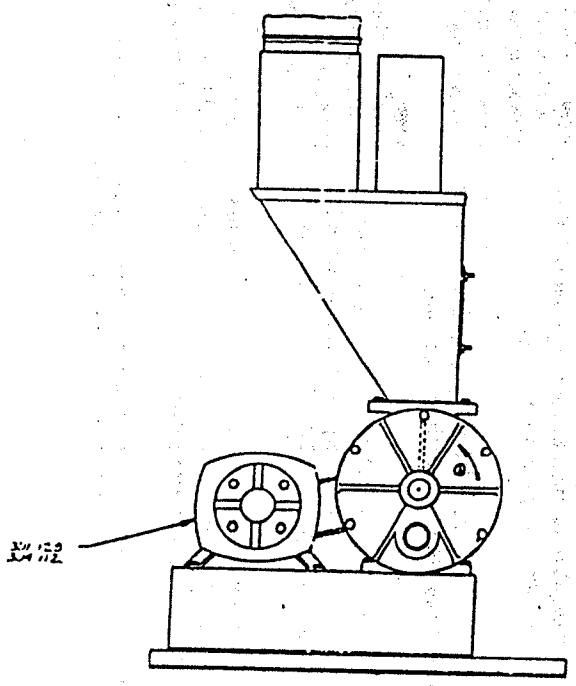

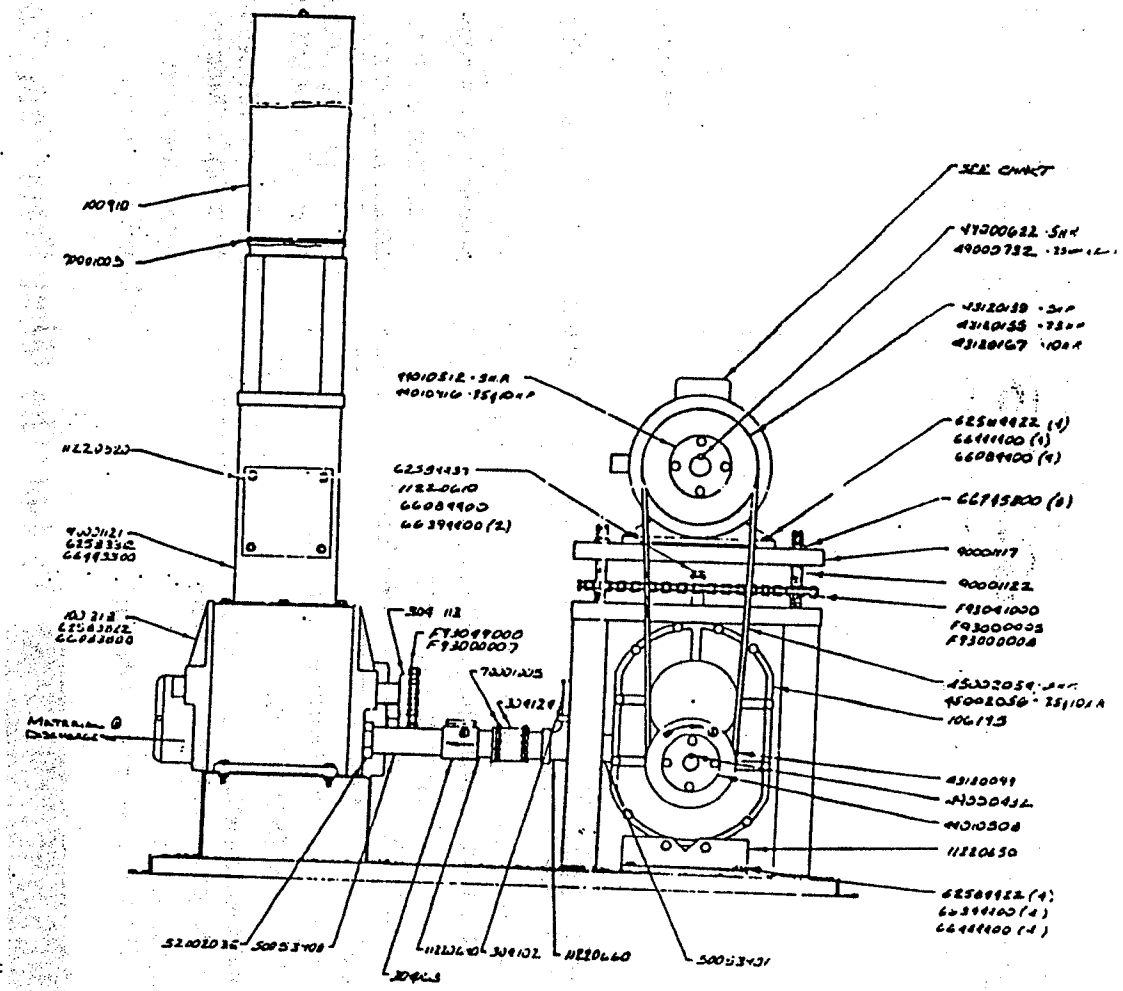

NOTE: PART #'S 100317, 5000 3791, 309120, & H220600 ARE LEFT OFF FOR SHIPPING. SEAL INSIDE MACHINE HOUSING.

ROOTS DRESSER

Universal® RAI BLOWER

INSTRUCTIONS

ROTARY LOBE BLOWERS

CONTENTS

NUMBERS IN ( ) ARE METRIC EQUIVALENTS

DO THESE THINGS To Get The Most From Your Roots Blower

1 Check shipment for damage. If found, file claim with carrier and notify Sales Office.

2 Unpack shipment carefully, and check contents against Packing List. Notify Sales Office if a shortage appears.

3 Store in a clean, dry location until ready for installation, if possible. Lift by methods discussed under INSTALLATION to avoid straining or distorting the equipment. Keep covers on all openings. Protect against weather and corrosion if outdoor storage is necessary.

4 Read LIMITATIONS and INSTALLATION sections in this manual and plan the complete installation.

5 Provide for adequate safeguards against accidents to persons working on or near the equipment during both installation and operation. See SAFETY PRECAUTIONS.

6 Install all equipment correctly. Foundation design must be adequate and piping carefully done. Use recommended accessories for operating protection.

7 Make sure both driving and driven equipment is correctly lubricated before start-up. See LUBRICATION.

8 Read starting check points under OPERATION. Run equipment briefly to check for installation errors and make corrections. Follow with a trial run under normal operating conditions.

9 In event of trouble during installation or operation, do not attempt repairs of Roots furnished equipment. Notify Sales Office or factory, giving all nameplate information plus an outline of operating conditions and a description of the trouble.

10 Unauthorized attempts at equipment repair may void Manufacturer's warranty. Units out of warranty may be repaired or adjusted by the owner. It is recommended that such work be limited to the operation described in this manual, using Factory Parts. Good inspection and maintenance practices should reduce the need for repairs. See Distributor List on last page for parts and service after warranty period.

Bulletin IRB-103-592

OPERATING CHARACTERISTICS

Roots Universal® RAI blowers, as covered in this manual, are designated as air blowers, and may be used for handling air in either pressure or vacuum service. They are unsuitable for handling gases because shaft seals are not designed to prevent leakage to atmosphere.

The Roots rotary lobe blower is a positive displacement type unit, whose pumping capacity is determined by size, operating speed and pressure conditions. It employes two double-lobe impellers mounted on parallel shafts and rotating in opposite directions within a cylinder closed at the ends by headplates. As the impellers rotate, air is drawn into one side of the cylinder and forced out the opposite side against the existing pressures. The differential pressure developed, therefore, depends on the resistance of the connected systems.

Effective sealing of the blower inlet area from the discharge area is accomplished by use of very small operating clearances. Resulting absence of moving contacts eliminates the need for any internal lubrication. Clearances between the impellers during rotation are maintained by a pair of accurately machined timing gears, mounted on the two shafts extending outside the air chamber.

Operation of the familiar basic rotary lobe blower is illustrated in FIGURE 1, where air flow is right to left from inlet to discharge with the bottom impeller rotating clockwise. In Position 1 it is delivering a known volume (A) to the discharge, while space (B) between the upper impeller and cylinder wall is being filled. Counterclockwise rotation of this impeller then traps equal volume (B) in Position 2, and further rotation delivers it to the discharge in Position 3. At the same time, another similar one is forming under the lower impeller, and will be discharged when rotation reaches Position 1 again.

One complete revolution of the driving shaft alternately traps four equal and known volumes of air (two by each impeller) and pushes them through to the discharge. The pumping capacity of a lobe blower operating at a constant speed therefore remains relatively independent of reasonable inlet or discharge pressure variations. To change capacity, it is necessary either to change speed of rotation or vent some of the air.

No attempt should ever be made to control capacity by means of a throttle valve in the intake or discharge piping. This increases the power load on the driver, and may seriously damage the blower. Likewise, if a possibility exists that flow to the blower inlet may be cut off during normal operation of a process, then an adequate vacuum relief valve must be installed near the blower. A pressure type relief valve in the discharge line near the blower is also strongly recommended for protection against cut-off or blocking in this line.

When a belt drive is employed, blower speed can usually be adjusted to obtain desired capacity by changing the diameter of one or both sheaves. In a direct coupled arrangement, a variable speed motor or transmission is required, or air may be vented through a manually controlled unloading valve and silencer. If discharge air is returned to the blower inlet, it must be cooled to 100° F (38° C) through a cooling by-pass arrangement.

Before making any change in blower capacity or operating conditions, contact the nearest Distributor for specific information applying to your particular blower. In all cases, operating conditions must be maintained within the approved range of pressures, temperatures and speeds as stated under LIMITATIONS. Also, the blower must not be used to handle air containing liquids or solids, or serious damage to the rotating parts will result.

OPERATING LIMITATIONS

To permit continued satisfactory performance, a Roots Universal® RAI blower must be operated within certain approved limiting conditions. The Manufacturer's warranty is, of course, also contingent on such operation.

Maximum limits for pressure, temperature and speed are specified in Table 1 for various sizes of Universal® RAI blowers. These limits apply to all blowers of normal construction, having operating clearances as listed in Table 5 when operated under standard atmospheric conditions. Do not exceed any of these limits.

Example: The listed maximum allowable temperature rise (increase in air temperature between inlet and discharge) for any particular blower may occur well before its maximum pressure or vacuum rating is reached. This can easily occur at high altitude or at very low speed.

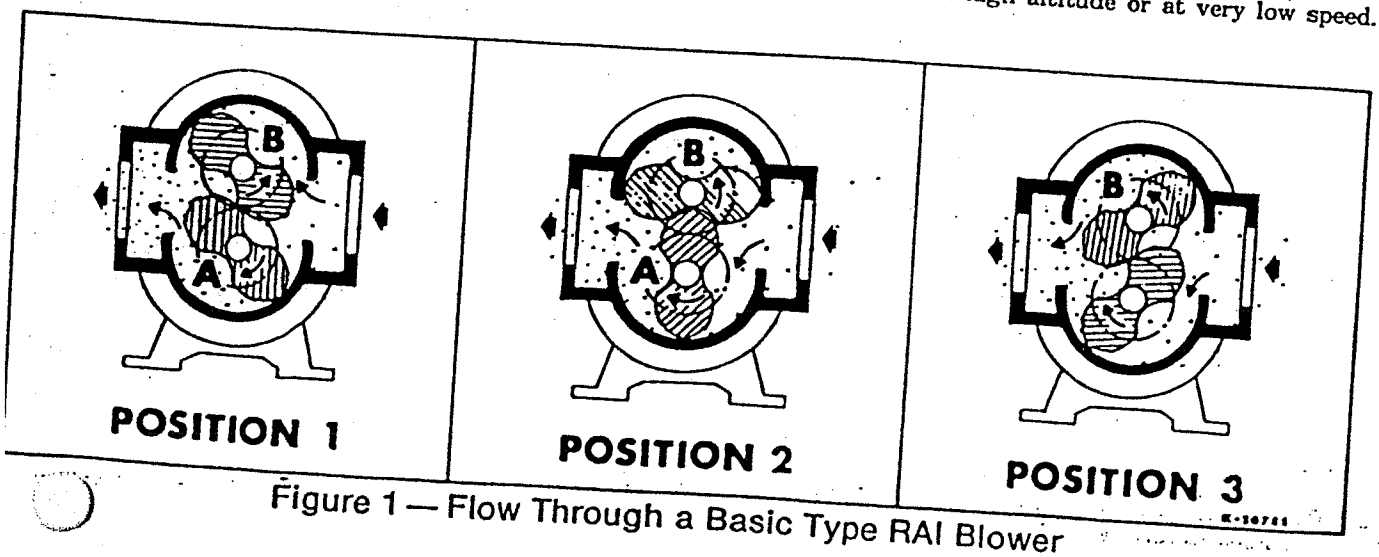

Figure 1 — Flow Through a Basic Type RAI Blower

Temperature rise then is the limiting condition. In other words, the operating limit is always determined by the maximum rating reached first. It can be any one of the three: pressure, temperature or speed.

Be sure to arrange connections or taps for thermometers and mercury type pressure or vacuum gauges at or near the inlet and discharge connections of the blowers. These, along with a good tachometer, will enable periodic checks of operating conditions to be made easily.

PRESSURE — On pressure service, the pressure rise in pounds per square inch (kPa) (between blower inlet and discharge) must not exceed the figure listed for the specific blower frame size concerned. Also, in any system where the blower inlet is at a positive pressure above atmosphere, the discharge pressure must never exceed 25 PSI (172 kPa) gauge regardless of blower size.

On vacuum service, with the discharge going to atmospheric pressure, the inlet suction or vacuum in inches of mercury (Hg.) (kPa) must not be greater than the values listed for the specific frame size.

TEMPERATURE — Various blower frame sizes are approved only for installations where the following temperature limitations can be maintained in service.

A. Measured temperature rise in Fahrenheit degrees (C°) must not exceed listed values when the inlet is at ambient temperature. Ambient is considered as the general temperature of the space around the blower. This is not outdoor temperature unless the blower is installed outdoors.

B. If inlet temperature is higher than ambient, the listed allowable temperature rise values must be reduced by ⅔ of the difference between the actual measured inlet temperature and the ambient temperature.

C. Average of inlet plus discharge temperature must not exceed 220°F (104°C)

SPEED RANGE — Universal®RAI blowers may be operated at speeds up to the maximums listed for various frame sizes. They may be direct coupled to suitable constant speed drivers if pressure/temperature conditions are also within limits. At low speeds, excessive temperature rise may be the limiting factor as noted in the preceding example.

Table 1 — Maximum Allowable Operating Conditions

Frame Size	Speed RPM	Inlet Vac. Inches Hg. (kPa)	Temp. Rise Fahr. Deg. (C°)	Press. Rise PSI (kPa)
22	5275	14 (47)	225 (125)	12 (82)
24	5275	14 (47)	185 (102)	7 (47)
32	3600	14 (47)	225 (125)	15 (101)
33	3600	14 (47)	170 (94)	12 (82)
36	3600	14 (47)	115 (64)	7 (47)
42	3600	14 (47)	240 (133)	15 (101)
45	3600	14 (47)	170 (94)	10 (68)
47	3600	14 (40)	130 (72)	7 (47)
53	2850	14 (47)	195 (108)	15 (101)
56	2850	14 (47)	180 (100)	10 (68)
59	2850	14 (40)	115 (64)	7 (47)
65	2350	16 (53)	250 (139)	15 (101)
68	2350	16 (53)	240 (133)	12 (82)
615	2350	12 (40)	130 (72)	6 (40)
76	2050	16 (53)	250 (139)	15 (101)
711	2050	16 (53)	210 (117)	10 (68)
718	2050	12 (14)	130 (72)	6 (40)

BLOWER ORIENTATION

The unique removable feet feature of Roots Universal® RAI blowers permit field modification of blower mounting by repositioning blower feet and gear box breather as shown in Fig. 3.

Four blower mounting positions are possible:

1. Horizontal mounting, vertical air flow, drive shaft on left.
2. Same as (1) except drive shaft on right.
3. Vertical mounting, horizontal air flow, drive shaft on bottom.
4. Same as (3) except drive shaft on top.

To change blower mounting:

1. Place blower on its feet.
2. Loosen feet capscrews (32).
3. Place blower on a solid base resting on the gear box end with drive shaft on top.
4. Remove feet. (Note - Feet capscrews (32) are longer than cylinder capscrews (26), only capscrews (32) are to be used for feet.)
5. Remove cylinder capscrews (32) where feet are to be re-installed. Install capscrews (26) in the location previously occupied by feet capscrews (32).
6. Install feet using capscrews (32).
7. Place blower on its feet on flat surface.
8. Loosen feet capscrews (32) and square up blower and re-tighten capscrews (32).
9. Gear box has four threaded holes, one with breather and three with pipe plugs. Remove pipe plug (21) from the top most hole. Remove breather (25) and install it in the top most hole. Install pipe plug that was removed from the top hole into the hole previously occupied by the breather. The breather and the pipe plug should be sealed with a thread sealer.

For convenience, the position of the grease fitting (37) and the relief fitting (38) could be interchanged, however each bearing must have one grease fitting (37) and one relief fitting (38).

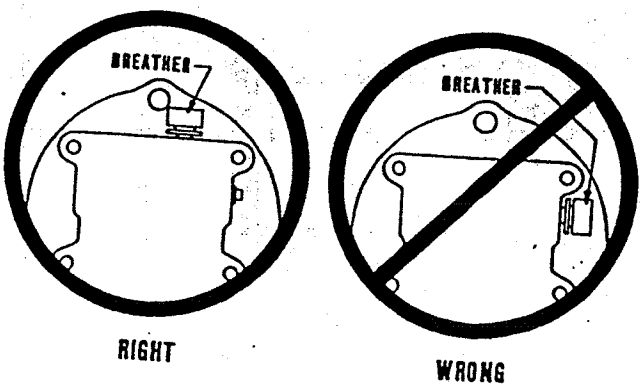

Figure 2 — Breather Installation

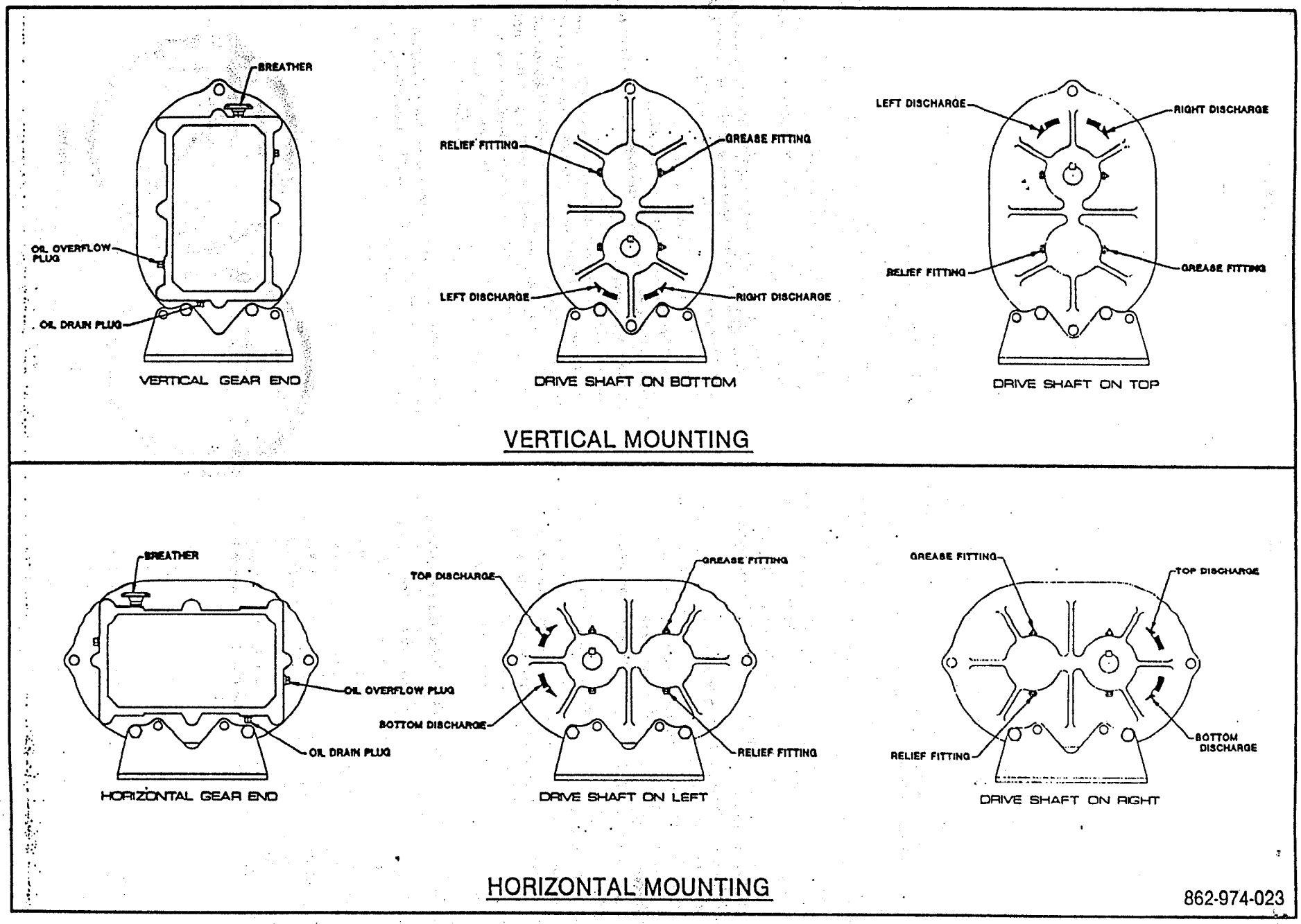

Figure 3 — Blower Orientation and Lubrication Points

INSTALLATION

Roots Universal®RAI blowers are internally and externally treated after factory assembly to protect against normal atmospheric corrosion before installation. Maximum period of internal protection is considered to be one year under average conditions, if closing plugs or seals are not removed. Protection against chemical or salt water atmosphere is not provided. Avoid opening the blower until ready to start installation, as protection will be lost quickly by evaporation.

NOTE — If there is to be an extended period between delivery (and/or installation) and startup, the following steps should be taken to insure corrosion protection:

1. Coat internals of cylinder and gearbox with Nox-Rust or equivalent. Repeat once a year or as conditions may require. Motorstor is oil soluble and does not have to be removed before lubricating. If desired, No. VCI10 may be removed from within the cylinder shortly before startup by spraying a fine mist of petroleum solvent through the blower while it is running at a slow speed with open inlet and discharge, or it can remain in the blower if it is not harmful to the operation of the connected system.
2. Fill drive end bearing cavities with grease as specified in Lubrication section.
3. Paint shaft extension, inlet and discharge flanges, and all other exposed surfaces with Nox-Rust X-110 or equivalent.
4. Seal inlet, discharge, and all vent openings with tape. It is not recommended that the unit be set in place, piped to the system, and allowed to remain idle for extended periods. If any part is left open to the atmosphere, the Motorstor vapor will escape and lose its effectiveness.
5. Units are not to be subjected to excessive vibration during storage. If stored outdoors, provide coverage such as a tarpaulin or lean-to.
6. Rotate drive shaft three or four revolutions every two weeks.
7. Prior to startup, remove flange covers on both inlet and discharge and inspect internals to insure absence of rust. Check all internal clearances. Also, at this time, remove gearbox and inspect gear teeth for rust.

Because of the completely enclosed blower design, location of the installation is generally not a critical matter. A clean, dry and protected indoor location is to be preferred. However, an outdoor or wet location will normally give satisfactory service. Important requirements are that the correct grade of lubricating oil be provided for expected temperatures, and that the blower be located so that routine checking and servicing can be handled conveniently after installation. Effect of the location on driver and accessory equipment must also be considered.

Supervision of the installation by a Factory Service Engineer is not usually required for these blowers. Workmen with experience in installing light-medium weight machinery should be able to produce satisfactory results. Handling of the equipment needs to be accomplished with care, and in compliance with safe practices. Blower mounting must be solid, without strain or twist, and air piping must be clean, accurately aligned and properly connected.

A bare blower without base should be lifted by a rope sling, with one loop passing under the gearhouse and the other loop under the cylinder.

When a blower is furnished mounted on a baseplate, with or without a driver, use of lifting slings passing under the base flanges is required. Arrange these slings so that no strains are placed on the blower casing or mounting feet, or on any mounted accessory equipment.

Before starting the installation, remove plugs, covers or seals from blower inlet and discharge connections and inspect the interior completely for dirt or foreign material. If cleaning is required, finish by washing the cylinder, headplates and impeller thoroughly with a petroleum solvent such as DuPont Triclene D. After this, turn the drive shaft by hand to make sure that the impellers turn freely at all points. Anti-rust compound on the drive shaft extension may also be removed at this time with the same solvent. Then plug the inlet and discharge connections to keep out dirt until ready to connect the air piping. Washing out is not required if the interior is found to be clean. The corrosion inhibitor used will vaporize and disappear during operation.

Care, plus consideration of all possible problems, will pay dividends when arranging the blower mounting. This is especially true when the blower is a "bare" unit furnished without a baseplate. The convenient procedure may be to mount such a unit directly on a floor or small concrete pad, but this generally produces least satisfactory results. It definitely causes the most problems in leveling and alignment.

Direct use of structural framing members is also not a recommended mounting. If unavoidable, the members must be rigidly reinforced when part of a building, and spring type mountings should not be used. Noise transmission can usually be reduced by use of a cork insulating pad 1 to 2 inches (25 to 50 mm) thickness. The pad should be supported by a full steel plate attached to the structure, with a rigid concrete slab laid on top of the cork to carry the blower and driver.

For a blower without base, it is recommended that a well anchored and carefully leveled steel or cast iron mounting plate be provided at the installation point. The plate should be ¾ to 1¼ inches (19 to 32 mm) thick, with its top surface machined flat, and needs to be large enough to provide leveling areas at one side and one end after the blower is mounted. It should have properly sized studs or tapped holes located to match the blower foot drilling. As an alternative, smaller plates at each end of the blower may be used. This is more complicated, usually makes leveling more difficult, and can produce twist or strains in the blower. Use of a high quality machinist's level is important. With the mounting plate in place and leveled, set the blower on it without bolting and check for rocking. If it is not solid, determine the total thickness of shims required under one foot to stop the rocking. Place half of this under each of the two short feet, and tighten the mounting studs or screws. Rotate the drive shaft to make sure the impellers still turn freely. If the blower is to

be direct coupled to a driving motor, consider the height of the motor shaft and the necessity for it to be aligned very accurately with the blower shaft. Best arrangement is for the blower to be bolted directly to the mounting plate while the driver is on shims of at least ⅛ inch (3 mm) thickness. This allows adjustment of motor position in final shaft alignment by varying the shim thickness.

Satisfactory installation can be obtained by setting the baseplate on a concrete slab that is rigid and free of vibration, and leveling the top of the base carefully in two directions so that it is free of twist. The slab must be provided with suitable anchor bolts. The use of grouting under and inside the base, after it has been carefully leveled by shimming, is recommended.

When blower and driver have been factory mounted on a common baseplate, the assembly will have been properly aligned and is to be treated as a unit for leveling purposes. It is possible for a base mounted assembly to become twisted during shipment thus disturbing the original alignment. For this reason, make the following checks after the base has been leveled and bolted down. Disconnect the drive and rotate the blower shaft by hand. It should turn freely at all points. Loosen the blower foot hold-down screws and determine whether all feet are evenly in contact with the base. If not, insert shims as required and again check for free impeller rotation. Finally, if blower is direct coupled to the driver, check shaft and coupling alignment carefully and make any necessary corrections prior to grouting.

In planning the installation, and before setting the blower, consider how piping arrangements are dictated by the blower design and assembly.

When a blower is DIRECT COUPLED to its driver, the driver RPM must be selected or governed so as not to exceed the maximum speed rating of the blower. Refer to LIMITATIONS for allowable speeds for various blower sizes. A flexible type coupling should always be used to connect the driver and blower shafts.

For engine drives, couplings with proper stiffness must be selected to avoid resonant torisonal vibrations. Also, safe operating speed must be limited to avoid critical speeds.

Coupling halves must be accurately aligned, and a sufficient gap between shaft ends provided, so that side strains and end thrust on either shaft are avoided or minimized. This will require considerable care in the mounting of the driver. The two shafts must be in as near perfect alignment in all directions as possible, and the gap must be established with the motor armature on its electrical center if end play exists. Coupling halves must be fitted to the two shafts such that they can be worked into place by hand. Maximum deviation in offset alignment of the shafts should not exceed .005" (.13 mm) total indicator reading, taken on the two coupling hubs. Maximum deviation from parallel of the inside coupling faces should not exceed .001" (.03 mm) when checked at six points around the coupling.

CAUTION

Couplings as well as sheave bushings must have a slight slide fit with the blower shaft such that they can be installed in place by hand. Any force used to install them will change blower end clearances resulting in blower damage. If an interference fit is desired for the coupling, the coupling hub should be heated and shrunk on the shaft. For engine drives, use "Locktite" between the coupling hubs and the blower/engine shafts and on the threads of the coupling set screws.

When a blower is BELT DRIVEN, a proper selection of sheave diameters can usually be made to adapt any standard driver speed to the required blower speed. This flexibility can sometimes lead to operating temperature problems caused by blower speed being too low. Make sure the drive speed selected is within the allowable range for the specific blower size, as specified under LIMITATIONS.

Belted drive arrangements usually employ two or more V-belts running in grooved sheaves, and a variety of positions are available for the driver. Installation of the driver is less critical than for direct coupling, but its shaft must be level and parallel with the blower shaft. The driver must also be mounted on an adjustable base to permit installing, adjusting and removing the V-belts. To position the driver correctly, both sheaves need to be mounted on their shafts and the nominal shaft center distance known for the belt lengths to be used.

Install the blower sheave (usually the larger one) so that its inner hub face is not more than ¼ inch (7 mm) from the bearing end cover. The shaft fit should be such that the sheave can be worked into place by hand. A tight or driving fit can damage a bearing, and may cause internal blower damage by forcing the impeller out of its normal operating position. A loose fit or wobbly sheave will cause vibration, and may result in shaft breakage.

The driver sheave should also be mounted as close to its bearing as possible, and again should fit the shaft correctly. Position the driver on its adjustable base so that ⅔ of the total movement is available in the direction away from the blower, and mount the assembly so that the face of the sheave is accurately in line with the blower sheave. This position minimizes belt wear, and allows sufficient adjustment for both installing and tightening the belts. After belts are installed, adjust their tension in accordance with the manufacturer's instructions. However, only enough tension should be applied to prevent slippage when the blower is operating under load. *Excessive tightening* can lead to early bearing failures.

Failure to properly align the blower and drive sheaves will result in the impeller being forced against one of the headplates during operation causing serious damage to the blower.

In the absence of belt manufacturer's instructions for tensioning, the following procedures may be used.

1. With the belts loose, pull the slack on all of them to the bottom side of the drive.
2. Adjust motor position to tighten belt until they appear to be seating in the sheave grooves.
3. Thump the belts with your fist. If they feel dead, tighten them more until they vibrate and feel springy when struck.
4. Run-in the drive for a short period, after preparing the blower as instructed in a following paragraph. While running, adjust until only a very slight bow appears in the slack side of the belts.
5. Stop the motor and compare the tensions of the individual belts by pressing down firmly with one hand on the top surface. It should be possible to deflect each

belt only to the point where its top surface is even with the bottoms of the other undeflected belts.

6. A new set of belts should be first tensioned about ⅓ greater than normal to allow for stretch and wear-in. Before putting the drive into normal operation, increase the tension as obtained above by a small amount. Recheck after each 8 hour operating period during the first 50 hours, and adjust as necessary.

Before operating the drive under power to check initial belt tension, first remove covers from the blower connections. Make sure the interior is still clean, then rotate the shaft by hand. Place a screen over the inlet connection to prevent anything being sucked into the blower while it is operating, and avoid standing in line with the discharge opening. Put oil in the gearhouse per instructions under LUBRICATION.

Before cnnecting piping, remove any remaining anti-rust compound from blower connections. Piping must be clean and should be sized so that the air velocity will not exceed 75 feet per second (23 m per second). Pipe used should be no smaller than blower connections. In addition, make sure it is free of dirt, scale, cuttings, weld beads, or foreign materials of any kind.

To further guard against damage to the blower, especially when an inlet filter is not used, install a substantial screen of 16 mesh backed with hardware cloth at or near the inlet connections. Make provisions to clean this screen of collected debris after a few hours operation. It should be removed when its usefulness has ended, as the wire will eventually deteriorate and small pieces going into the blower may cause serious damage.

Pipe threads or flanges must meet the blower connections accurately and squarely. Do not attempt to correct misalignment by springing or cramping the pipe. In most cases this will distort the blower casing and cause impeller rubbing. In severe cases it can prevent operation or result in a broken drive shaft. For similar reasons, piping should be supported near the blower to eliminate dead weight strains. Also, installation of flexible connectors or expansion joints is recommended.

Figure 4 represents in diagram form a blower installation with all accessory items that might be required under various operating conditions. Inlet piping should be completely free of valves or restrictions. When a shut-off valve (not shown) cannot be avoided, make sure a full size vacuum relief is installed near the blower inlet. This will protect against blower overload caused by accidental closing.

Need for an inlet silencer will depend on blower speed and pressure, as well as sound-level requirements in the general surroundings. An inlet filter is normally recommended, especially in dusty or sandy locations, for blower protection. A discharge silencer is also normally suggested. Specific recommendations on silencing can be obtained from the nearest Distributor. Silencers should be mounted as close to blower as possible.

Discharge piping requires a pressure relief valve, and should include a manual unloading valve to permit starting the blower under no-load conditions. Reliable pressure/vacuum gauges and good thermometers at both inlet and discharge are recommended to allow making the important checks on blower operating conditions. If the demand is constant, but somewhat lower than the blower output, excess may be blown off through the manual unloading valve.

In multiple blower installations when two or more units discharge into a common header, use of check valves is recommended. These should be of a direct acting or free swinging type, with one valve located in each blower

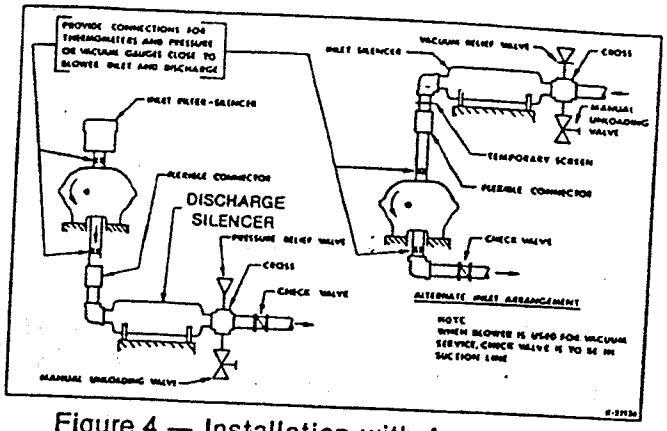

Figure 4 — Installation with Accessories

discharge line. Properly installed, they will protect against damage from reverse rotation caused by air back-flow through an idle blower.

After piping is completed, and before applying power, rotate the drive shaft by hand again. If it does not move with uniform freedom, look for uneven mounting, piping strain, excessive belt tension or coupling misalignment. Do not operate the blower more than briefly at this time because of possible inadequate oil supply in the gearhouse. Read LUBRICATION section.

LUBRICATION

A simple but very effective lubrication system is employed on Universal®RAI blowers. At the drive shaft end the bearings are grease lubricated using hydraulic pressure relief fittings. These relief fittings vent any excess grease, preventing pressure build-up on the seals. A restriction plug and metering orifice prevent loss of lubricant from initial surges in lubricant pressure but permit venting excess lubricant under steadily rising pressures.

The blind end bearings and timing gears are enclosed by a gearhouse located opposite the drive end of the blower. In a side outlet blower, the lower timing gear functions as an oil slinger, carrying lubricant to the upper timing gear and providing splash lubrication for the bearings. Pressure within the gearbox is vented through the breather vent plug (25).

The above description also applies in general to the top or bottom outlet style blower, the principal difference being that both gears dip into the oil sump.

Before starting blower, be sure oil has been put in gearhouse, as ALL OIL WAS DRAINED FOLLOWING SHOP TESTS. For recommended lubricating oil see Table 2. Use a good grade industrial type rust, oxidation, and foam inhibited, non-detergent oil.

Table 2 — Recommended Oil Grades

Ambient Temperature °F (°C)	Viscosity Range SSU at 100°F. (38°C)	Approximate SAE No.
Above 90° (32°)	1000 - 1200	50
32° to 90° (0° to 32°)	700 - 1000	40
0° to 32° (-18° to 0°)	500 - 700	30
Below 0° (-18°)	300 - 500	20

To fill the gearbox, remove the breather plug and the oil overflow plug (Fig. 3). Fill the reservoir up to the overflow hole. Place the breather and the overflow plug back into their respective holes.

Table 3 — Oil Sump Capacities

Frame Size	Capacity, Fl. Oz. (Liters) Vertical	Horizontal
22	3.4 (.1)	6.1 (.18)
24	3.4 (.1)	6.1 (.18)
32	8.5 (.25)	16.0 (.47)
33	8.5 (.25)	16.0 (.47)
36	8.5 (.25)	16.0 (.47)
42	12.7 (.37)	22.8 (.67)
45	12.7 (.37)	22.8 (.67)
47	12.7 (.37)	22.8 (.67)
53	16.0 (.47)	27.6 (.82)
56	16.0 (.47)	27.6 (.82)
59	16.0 (.47)	27.6 (.82)
65	28.3 (.84)	52.1 (1.54)
68	28.3 (.84)	52.1 (1.54)
615	28.3 (.84)	52.1 (1.54)
76	32.3 (.96)	59.5 (1.76)
711	32.3 (.96)	59.5 (1.76)
718	32.3 (.96)	59.5 (1.76)

Proper lubrication is usually the most important single consideration in obtaining maximum service life and the most satisfactory operation from the unit. Unless operating conditions are quite severe, a weekly check of gearhouse oil level and necessary addition of lubricant should be sufficient. However, oil should be changed after initial 100 hours of operation. Thereafter, a complete oil change normally is made after 1000 operating hours, or less, depending on the type of oil and oil operating temperature.

Shaft bearings at the drive end of the blower are grease lubricated and each bearing housing is equipped with pressure type grease fittings and pressure type relief fittings. When servicing drive end bearings, use a NLGI #2 premium grade, petroleum base grease with high temperature (300° service temperature) and moisture resistance and good mechanical stability. Using a pressure gun, force new lubricant into each drive end bearing housing until traces of clean grease comes out of the relief fitting.

After a long shutdown, it is recommended that the grease relief fittings be removed, the old grease flushed out with kerosene or #10 lubricating oil, drained thoroughly, and bearings refilled with new grease. Be sure grease relief fittings are reinstalled. Grease should be added using hand operated grease gun to the drive end bearings at varying time intervals depending on duty cycle and RPM. Table 4 has been prepared as a general greasing schedule guide based on average operating conditions. More frequent intervals may be necessary depending on the grease operating temperature and under unusual circumstances.

Table 4 — Suggested Bearing Lubrication Intervals

Speed in RPM	Operating Hours Per Day 8	16	24
	Greasing Intervals in Weeks		
750 - 1000	7	4	2
1000 - 1500	5	2	1
1500 - 2000	4	2	1
2000 - 2500	3	1	1
2500 - 3000	2	1	1
3000 and up	1	1	1

OPERATION

Before operating a blower under power for the first time, check the unit and the installation thoroughly to reduce the likelihood of avoidable troubles. Use the following procedure list as a guide, but consider any other special conditions in the installation.

1. Be certain that no bolts, tools, rags or dirt have been left in the blower air chamber.
2. Be certain that inlet piping is free of debris. If an outdoor intake without filter is used, be sure the opening is located so it cannot pick up dirt and is protected by a strong screen or grille. Use of the temporary protective screen at the blower as described under INSTALLATION is strongly recommended.
3. Recheck blower leveling, drive alignment and tightness of all mounting bolts if installation is not recent. If belt drive is used, adjust belt tension correctly.
4. Turn drive shaft by hand to make sure impellers still rotate without bumping or rubbing at any point.
5. Make sure oil level in blower gearbox is correct.
6. Check lubrication of driver. If it is an electric motor, be sure that power is available and that electrical overload devices are installed and workable.
7. Open the manual unloading valve in the discharge air line. If a valve is in the inlet piping, be sure it is open.
8. Bump blower a few revolutions with driver to check that direction of rotation is correct, and that both units coast freely to a stop.

After the preceding points are cleared, blower is ready for trial operation under "no-load" conditions as set up under Item 7. The following procedure is suggested to cover this initial operating test period.

a. Start blower, let it accelerate to full speed, then shut off. Listen for knocking sounds, both with power on and as speed slows down.
b. Repeat above, but let blower run 2 or 3 minutes. Check for noises, and vibrations of 5 mils or greater.
c. Operate blower for about 10 minutes unloaded. Check oil levels. Feel cylinder and headplate surfaces for development of spots too hot to touch, indicating impeller rubs. Be aware of any noticeable increase in vibration.

Assuming that all trials have been satisfactory, or that necessary corrections have been made, the blower should now have a final check run of at least one hour under normal operating conditions. After blower is re-

started, gradually close the discharge unloading valve to apply working pressure. At this point it is recommended that a good pressure gauge or manometer be connected into the discharge line if not already provided, and that thermometers be in both inlet and discharge lines. Readings from these instruments will show whether pressure or temperature ratings of the blower are being exceeded.

During the final run, check operating conditions frequently and observe the oil levels at reasonable intervals. If excessive noise or local heating develops, shut down immediately and determine the cause. If either pressure rise or temperature rise across the blower exceeds the limit specified in this manual shut down and investigate conditions in the piping system or in the process to which air is being supplied. Refer to the TROUBLE SHOOTING CHECKLIST for suggestions on various problems that may appear.

The blower should now be ready for continuous duty operation at full speed. During the first few days make periodic checks to determine whether all conditions remain steady, or at least acceptable. This may be particularly important if the blower is supplying air to a process system where conditions can vary. At the first opportunity, stop the blower and clean the temporary inlet protective screen. If no appreciable amount of debris has collected, the screen may be removed. See comments under INSTALLATION. At this same time, verify leveling, coupling alignment or belt tension, and mounting bolt tightness.

Should operating experience prove that blower capacity is a little too high for the actual air requirements, a small excess may be blown off continuously through the manual unloading vent valve. Never rely on the pressure relief valve as an automatic vent. Such use may cause the discharge pressure to become excessive and can also

TROUBLE SHOOTING CHECKLIST

TROUBLE	ITEM	POSSIBLE CAUSE	REMEDY
No Air Flow	1	Speed too low	Check by tachometer and compare with speed shown on Roots Order Acknowledgement.
	2	Wrong rotation	Compare actual rotation with Figure 2. Change driver if wrong.
	3	Obstruction in piping	Check piping, screen, valves, silencer, to assure an open flow path.
Low capacity	4	Speed too low	See item 1. If belt drive, check for slippage and readjust tension.
	5	Excessive pressure	Check inlet vacuum and discharge pressure, and compare these figures with specified operating conditions on Order.
	6	Obstruction in piping	See item 3.
	7	Excessive slip	Check inside of casing for worn or eroded surfaces causing excessive clearances.
Excessive Power	8	Speed too high	Check speed and compare with Roots Order Acknowledgement.
	9	Pressure too high	See item 5.
	10	Impellers rubbing	Inspect outside of cylinder and headplates for high temperatures areas, then check for impeller contacts at these points. Correct blower mounting, drive alignment.
Overheating of Bearings, or Gears	11	Inadequate lubrication	Restore correct oil levels in gearbox and lubricate.
	12	Excessive lubrication	Check gear oil level. If incorrect, drain and refill with clean oil of recommended grade.
	13	Excessive pressure rise	See item 5.
	14	Coupling misalignment	Check carefully. Realign if questionable.
	15	Excessive belt tension	Readjust for correct tension.
	16	Speed too low	Speeds lower than the minimum recommended will overheat the entire blower.
Vibration	17	Misalignment	See item 14.
	18	Impellers rubbing	See item 10.
	19	Worn bearings/gears	Check gear backlash and condition of bearings.
	20	Unbalanced or rubbing impellers	Scale or process material may build up on casing and impellers, or inside impellers. Remove build-up to retore original clearances and impeller balance.
	21	Driver or blower loose	Tighten mounting bolts securely.
	22	Piping resonances	Determine whether standing wave pressure pulsations are present in the piping. Refer to Distributors.

result in failure of the valve itself. If blower capacity appears to be too low, refer to the TROUBLE SHOOTING CHECKLIST first. If no help is found there it may be possible to increase the blower speed. Before attempting this change, contact the nearest Distributor for recommendations. Be prepared to furnish data on actual air requirements and operating pressure/temperature conditions.

SAFETY PRECAUTIONS

For equipment covered specifically or indirectly in this instruction book, it is important that all personnel observe safety precautions to minimize the chances of injury. Among many considerations, the following should particularly be noted:

- **Blower casing and associated piping or accessories may become hot enough to cause major skin burns on contact.**
- **Internal and external rotating parts of the blower and driving equipment can produce serious physical injuries. Do not reach into any opening in the blower while it is operating, or while subject to accidental starting. Cover external moving parts with adequate guards.**
- **Disconnect power before doing any work and avoid bypassing or rendering inoperative any safety or protective devices.**
- **If blower is operated with piping disconnected, place a strong coarse screen over the inlet and avoid standing in the discharge air stream.**
- **Stay clear of open inlet piping (suction area) of pressure blowers, and the open discharge blast from vacuum blowers.**
- **Stay clear of the blast from pressure relief valves and the suction area of vacuum relief valves.**
- **Avoid extended exposure in close proximity to machinery which exceeds safe noise levels.**
- **Use proper care and good procedures in handling, lifting, installing, operating and maintaining the equipment.**
- **Casing pressure must not exceed 25 PSI (172 kPa) gauge. Do not pressurize vented cavities from an external source, nor restrict the vents.**
- **Do not use air blowers on explosive or hazardous gases.**
- **Other potential hazards to safety may also be associated with operation of this equipment. All personnel working in or passing through the area should be warned by signs and trained to exercise adequate general safety precautions.**

MAINTENANCE & REPLACEMENTS

A good program of inspection and maintenance servicing, followed consistently, is the most reliable method of minimizing repairs to a blower. A simple record of services and dates will help keep this work on a regular schedule. Basic service needs are lubrication, checking for hot spots or increase in vibration and noise and the recording of operating pressures and temperatures. Above all, a blower must be operated within its specified rating limits, to obtain satisfactory service life.

A newly installed blower should be checked frequently during the first month of full-time operation. Attention thereafter may be less frequent, depending on what the early checks have shown. Lubrication is normally the most important consideration. Unless operating conditions are unusually severe, a weekly check of oil levels in the gearbox, with addition of oil as required, should be sufficient. Complete oil changes should be made at intervals of 1000 operating hours, or more frequently if oil condition becomes poor.

Driver lubrication practices should be in accordance with the manufacturer's instructions. If direct connected to the blower through a lubricated type coupling, the coupling should be checked and greased each time blower oil is changed. This will help reduce wear and prevent it from causing vibration. In a belted drive system, check belt tension periodically and inspect for frayed or cracked belts. Refer to tensioning instructions under INSTALLATION.

In a new and properly installed blower there are no moving contacts between the two impellers, or between the impeller and cylinder or headplates. Wear is then confined to the bearing which support and locate the shafts, the shaft seals, and the timing gears. All are lubricated, and wear should be nominal if clean oil of the correct grade is always supplied. Seals are subject to deterioration as well as wear, and may require replacement at varying periods.

Shaft bearings have been selected to have optimum life under average conditions with proper lubrication. They are critical in the service life of the blower. Gradual bearing wear may allow a shaft position to change slightly, until rubbing develops between impeller and cylinder headplate. This will cause spot heating, which can be detected by feeling these surfaces. Sudden bearing failure is usually more serious. Since the shaft and impeller are no longer supported and properly located, extensive general damage to the blower casing and gears is likely to occur.

Shaft seals should be considered expendible items, to be replaced whenever drainage from the headplate vent cavity becomes excessive or when the blower is disassembled for any reason. Sealing effectiveness can vary considerably from seal to seal and is also affected by shaft smoothness under the seal lip. Because of these normal variables, minor seal leakage should not be considered an indicator for seal replacement.

Timing gear wear, when correct lubrication is maintained should be negligible over a period of years. Gear teeth are cut to provide the correct amount of backlash, and gears correctly mounted on the shafts will accom-

modate a normal amount of tooth wear without permitting contact between lobes of the two impellers.

However, a high oil level will cause churning and excessive heating, indicated by an unusually high temperature at the bottom of the gear housing. Consequent heating of the gears will result in loss of tooth-clearance or backlash, and rapid wear of the gear teeth usually will develop. Continuation of this tooth wear will eventually produce impeller contacts (knocking), and from this point serious damage will be unavoidable if blower operation is continued. A similar situation can be produced suddenly by gear tooth fracture, which is usually brought on by sustained overloading or momentary shock loads.

Operating problems may also develop from causes other than internal parts failure. Operating clearances within a blower are only a few thousandths of an inch (hundredths of a mm). This makes it possible for impeller interferences or casing rubs to result from shifts in the blower mounting or from changes in piping support. Foreign materials sucked into the blower will also cause trouble, which can only be cured by disconnecting the piping and thoroughly cleaning the blower interior.

If this type of trouble is experienced, and the blower is found to be clean, try removing mounting strains. Loosen blower mounting bolts and reset the leveling and drive alignment. Then tighten mounting again, and make sure that all piping meets blower connections accurately and squarely before reconnecting it.

A wide range of causes for operating troubles are covered in the TROUBLE SHOOTING CHECKLIST. The remedies suggested there in some cases need to be performed by qualified mechanics with a good background of general experience, using procedures detailed in this manual. Major repairs generally are to be considered beyond the scope of maintenance, and should be referred to the nearest Distributor listed on the last page.

Warranty failures should not be repaired at all, unless specific approval has been obtained through a Distributor or a factory before starting work. Unauthorized disassembly within the warranty period may void the warranty.

When a blower is taken out of service it may require internal protection against rusting or corrosion. The need for such protection must be a matter of judgment based on existing conditions as well as length of downtime. Under favorable conditions, protection will probably not be needed if shut-down is not longer than a month. Under atmospheric conditions producing rapid corrosion, the blower should be protected immediately. If blower is to be shut down for an extended period of time, see suggestions for corrosion protection under installation.

It is recommended that major repairs, if needed, be performed at a Dresser authorized service facility. However, it is recognized that this may not always be practical, especially when a spare blower is not available. If a blower is out of the warranty period, mechanical adjustments and parts replacement may be undertaken locally at the owner's option and risk. It is recommended that Factory Parts be used to insure fit and suitability. The maintenance of a small stock of on-hand spare parts can eliminate possible delays. When ordering parts give Item Numbers and their word descriptions from Figures 5 & 6. Also specify quantities wanted and the blower size and serial number from the nameplate.

Repairs or adjustments are best performed by personnel with good mechanical experience and the ability to follow the instructions in this manual. Some operations involve extra care and patience, and a degree of precision work. This is especially true in timing impellers and in handling bearings. Experience indicates that a high percentage of bearing failure is caused by dirt contamination before or during assembly. Therefore, the work area should be cleaned before starting disassembly, and new or re-usable parts protected during progress of the work.

In the following outlines of repair procedures, numbers shown in brackets ( ) correspond to the Item Numbers used in assembly drawing, Figures 11 & 13. It is recommended that the procedure be studied carefully and completely, with frequent reference to the drawings, before starting work. This will produce better efficiency through an understanding of what work is to be done, and the order of doing it. Before disassembly, mark all parts so that they may be returned to original locations or relative positions.

A — Replacing Timing Gears

1. Drain all oil from the gearhouse by removing drain plug (21) in the bottom. Remove gearhouse by taking out all cap screws (23) in its flange. It may be necessary to bump the sides with a wood block or mallet to break the flange joint.
2. Reach through one of the blower pipe connections and place a chalk mark on the strip of one impeller and the mating waist of the other, so that they may easily be returned to their original relative positions.

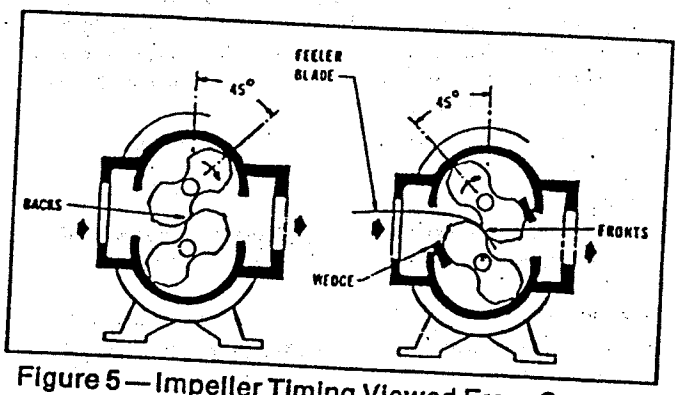

Figure 5—Impeller Timing Viewed From Gear End

3. GEAR REMOVAL: For this operation, the impellers should be wedged as shown in Figure 5. Back off gear clamping nuts (17) about ¼". Use a puller of the type shown in Figure 10. Position it around the gear per Figure 9. As the puller set screw is torqued, the puller will have a tendency to turn and contact teeth of the other gear. To prevent this contact, hold the puller corner nut with a wrench while torquing the set screw. Once the gear is unseated, remove the puller. Remove gear nuts (17) and the gear. Repeat same procedure for the other gear. NOTE: Do not remove gear nuts (17) completely before the gears are unseated from the taper fits or damage/injury may result.

4. GEAR INSTALLATION: Place impellers in correct position as previously marked. Be sure shafts and gear bores are clean and free of scratches. Clean the shaft tapered fits. Place hardwood wedges as shown in Figure 5. Install drive gear (4) and gear nut (17) so match mark at tooth is at the line of engagement. Tighten the drive gear nut to the torque given in Table 5. Blower assembly must be fastened down for torquing operation.

TABLE 5 — GEAR NUT TORQUE

Gear Size (in.)	Torque	
	lb.-ft.	(kg-m)
2.5	60	(8.3)
3.5	110	(15.2)
4.0	190	(26.3)
5.0	250	(34.6)
6.0	400	(55.3)
7.0	550	(76.1)

5. Installing driven gear (4) - Insert a long, metal feeler gauge between the impellers' lobes at the fronts or backs as shown in Figure 5. Feeler gauge thickness to be a middle value from Table 6 for fronts and backs. Align the gear so the tooth match marks agree with the drive gear, then install nut (17). Tighten lightly with a small wrench, then check front and back clearances against Table 6 for each 45° position. Both fronts and backs should be about the same and within the specified range in Table 6. Adjust gear position, if necessary, then insert the corrected feeler gauge and wedges and use a torque wrench to tighten the gear nut to the torque specified in Table 5. Remove wedges and rotate the drive shaft by hand to make sure there are no gear tight spots or impeller contacts.

   Caution! Keep fingers away from impellers and gears.

6. Check the end clearances between impellers and headplates. Adjust clearances per B-15 below.

7. When clearances are correct, clean and re-install the gearhouse. Check condition of flange gasket (7) and replace if questionable. Fill gearhouse to correct level with proper grade of oil.

B — Replacing Shaft Bearings, and Impellers

Remove coupling or sheave from the drive shaft. Drain and remove gearhouse, and pull the timing gears. If gears are to be re-used, mark them so they may be returned to the same shafts.

1. Break corners and deburr the keyway. Remove bearing end cover at the drive end. Remove bearing clamp plates (34).

2. Make single and double identifying punch marks on the mating edges of headplate and cylinder flanges at the two ends of the blower.

3. At the drive end, drive out the two dowel pins and remove all capscrews holding headplate to cylinder. By inserting jacking screws into the two threaded flange holes, and turning them in evenly, the headplate will be separated from the cylinder. As the headplate comes off the shafts it will bring bearings with it. 2½" and 3½" gear diameter units do not have tapped holes for jack screws in the drive end headplates. Remove dowel pins and all capscrews holding headplate to cylinder and foot on the drive end. Support unit under gear end cylinder flange with the shafts vertical. Using soft metal block against gear end shafts, push them out of gear end headplate.

4. For 2½" and 3½" gear diameter units, support the drive end headplate on the underside, and using soft metal block against drive end, shafts, push them out of drive end headplate.

   For 4", 6" & 7" gear diameter units, from the gear end, using a wood or soft metal block against the ends of the shafts, drive them out of the headplate. If they are to be reused, protect them from damage in this operation.

5. If blower interior surfaces need cleaning, it may be advisable to separate the gear end headplate from the cylinder. Use the same general procedure as employed at the drive end.

6. Working from the back (flat) face of each headplate, push or tap out the bearings and seals. Use a round bar or tube that will pass through the shaft clearance holes in the headplates. All lip seals will be damaged during removal and must be replaced.

7. Clean bearing and seal pockets in headplates and remove burrs or rough edges. (Apply a thin coating of sealant on seal O.D.) Press new seals (27) into gear end headplate using a round tube or bar with recessed end that will bear on the outer metal edge of seal enclosure. Seal lip should point toward the driving tool. Seals to be flush with outboard bore face. Apply a light coat of oil or grease to the seal lips. In a similar fashion, install lip seals into the drive end headplate.

8. Place cylinder on a flat surface. Assemble gear end headplate to cylinder after checking flange punch marks. Drive in the two locating dowel pins before tightening flange screws. Also install gear end foot using the same longer cap screws (32) and washers (41). (On 6" & 7" Universal® RÁI install both gear and feet.)

9. Place the assembly horizontally on steel blocks with gear end headplate on bottom. The height of the blocks should be sufficient to clear gear end shaft extensions. Assemble impellers into the cylinder with the drive shaft (longer shaft) in same

location as in original assembly. Before starting the shafts through the headplate holes, make sure shaft ends have no sharp or rough edges to damage seal lips. Position impellers at 90° to each other in the cylinder, using lobe-and-waist match marks if original impellers are being re-installed. Install drive end headplate and feet in same manner as gear end.

10. It is recommended that new bearings be used for rebuild. Apply thin film of machine oil on the shaft bearing fit, bearing I.D., and headplate bearing bore. Install drive end bearings into headplate. Use a tube with flanged end that will contact both bearing faces simultaneously. Refer to Fig. 11 for proper bearing depths.

    NOTE: Cylindrical drive bearing should be installed with inner race large shoulder facing outboard.

11. Place blower on its feet on a flat surface. Loosen feet capscrews (32) and square up unit. Re-tighten capscrews (32). Clamp unit down to a solid base for further assembly.

12. Oil the gear end bearing fits as described previously. Install 2½-5" Universal® RAI gear end bearings flush with the headplate bearing shoulders using proper drivers. On 6" & 7" Universal® RAI, install thrust washer (29) in bearing bores then install gear end bearings so that they protrude 1/16" (1.6mm) above headplate surface.

13. Install bearing clamp plates (34). On 6" & 7" Universal® RAI, impeller end clearances are also to be set during this step. Install clamp plates (34) with capscrews (31) making sure that the gap between the clamp plates and the headplate is even all around, at the same time, set end clearances per Table 5.

14. Install gears and time impellers as in (A).

15. For setting end clearances on 2½-5" gear diameter units, special tools, thrust adjuster fork Fig. 7 and thrust adjuster saddle Figure 8 are required. Refer to Fig. 6 for installation of tools. The flat side of the saddle rests against the bearing inner race and the flat side of the fork rests against the back side of the gear. Install a shim, with thickness equal to gear end clearance (Table 6), between the impeller and the gear end headplates. Tap on top of the fork until the shim becomes snug. Remove the shim and check end clearances. To increase gear end clearance, tap on the end of the gear end shaft with a soft metal mallet. On units, Universal® RAI, set end clearances for 6" & 7" by turning capscrews (31) evenly in or out.

16. Install drive end cover (5) after packing bearing cavities with suitable grease. Replace drive shaft seal. Lip must point toward (33) the bearing. Exercise care not to damage the lip as it passes over shaft keyway.

17. Install gasket item (7). Install the gear house after cleaning out the inside. Tighten gear box cap screws (23) evenly. Fill with correct grade of oil until oil flows out through oil level hole. Grease drive and bearings. (See Lubrication.)

18. Reinstall coupling or belt sheave making sure that they have a slight slide fit with the shaft and could be installed by hand.

Where repairs involve parts replacement, it is recommended that Factory Parts be used to insure fit and suitability. Delay in making such repairs can be reduced by having spare parts on hand.

When ordering parts, please furnish all information from the blower nameplate.

Repairs or adjustments to blowers should be performed by personnel with a good back ground of general mechanical experience and the ability to follow the detailed instructions in this manual. No special tools are required. Some operations involve extra care and a degree of precision work. This is especially true in timing impellers, and in handling bearings. Experience indicates that a high percentage of bearing failures is caused by dirt contamination before or during assembly. Therefore, clean the work area before starting disassembly, and protect new or reuseable parts during progress of the work. (See page 23 for Repair Kit Information.)

INTERNAL CLEARANCES

References to operating clearances in this manual include only one mention of the specific amount of clearance to be used or expected. For units in good condition this information is not essential in field service work. Situations may arise, however, when it is desirable to compare existing clearances with the correct Engineering values or to re-establish clearances.

Listed in Table 6 are the ranges of impeller clearances used in factory assembly of normal Universal® RAI blowers. It should be kept in mind that clearances may change slightly in service, but should never be less than the minimum values listed. Only well qualified personnel should attempt to measure clearances for direct comparison with this data.

Table 6 — Normal Clearances for Universal® RAI Blowers — Inches (MM)

SIZE	IMPELLER ENDS			CYLINDER		IMPELLER
	TOTAL	DRIVE END MINIMUM	GEAR END MINIMUM	INLET & DISCHARGE	CENTER	FRONTS BACKS
22	.006/.100 (.15-.25)	.003 (.08)	.003 (.08)	.004/.0055 (.1-.14)	.002/.003 (.05-.08)	.007/.01 (.18-.25)
24	.006/.100 (.15-.25)	.003 (.08)	.003 (.08)	.004/.0055 (.1-.14)	.002/.003 (.05-.08)	.007/.01 (.18-.25)
32	.006/.011 (.15-.28)	.003 (.08)	.003 (.08)	.0045/.0065 (.11-.17)	.002/.003 (.05-.08)	.01/.012 (.25-.30)
33	.006/.011 (.15-.28)	.003 (.08)	.003 (.08)	.0045/.0065 (.11-.17)	.002/.003 (.05-.08)	.01/.012 (.25-.30)
36	.006/.011 (.15-.28)	.003 (.08)	.003 (.08)	.0045/.0065 (.11-.17)	.002/.003 (.05-.08)	.01/.012 (.25-.30)
42	.008/.011 (.20-.28)	.004 (.10)	.004 (.10)	.005/.007 (.13-.18)	.003/.004 (.08-.10)	.009/.012 (.23-.30)
45	.008/.013 (.20-.33)	.004 (.10)	.004 (.10)	.005/.007 (.13-.18)	.003/.004 (.08-.10)	.012/.015 (.3-.38)
47	.008/.013 (.20-.33)	.004 (.10)	.004 (.10)	.005/.007 (.13-.18)	.003/.004 (.08-.10)	.012/.015 (.3-.38)
53	.008/.011 (.20-.28)	.004 (.10)	.004 (.10)	.0055/.0075 (.14-.19)	.003/.004 (.08-.10)	.011/.013 (.28-.33)
56	.008/.013 (.20-.33)	.004 (.10)	.004 (.10)	.0055/.0075 (.14-.19)	.003/.004 (.08-.10)	.015/.017 (.38-.43)
59	.008/.013 (.20-.33)	.004 (.10)	.004 (.10)	.0055/.0075 (.14-.19)	.003/.004 (.08-.10)	.015/.017 (.38-.43)
65	.012/.016 (.30-.40)	.008 (.20)	.004 (.10)	.006/.008 (.15-.2)	.006/.008 (.15-.20)	.010/.014 (.25-.36)
68	.014/.018 (.36-.46)	.008 (.20)	.004 (.10)	.006/.008 (.15-.2)	.006/.008 (.15-.20)	.010/.014 (.25-.36)
615	.014/.018 (.36-.46)	.008 (.20)	.004 (.10)	.006/.008 (.15-.2)	.006/.008 (.15-.20)	.010/.014 (.25-.36)
76	.012/.016 (.30-.40)	.008 (.13)	.004 (.10)	.006/.008 (.15-.2)	.006/.008 (.15-.20)	.013/.015 (.33-.38)
711	.014/.018 (.36-.46)	.010 (.25)	.004 (.10)	.006/.008 (.15-.2)	.006/.008 (.15-.20)	.013/.015 (.33-.38)
718	.014/.018 (.36-.46)	.010 (.25)	.004 (.10)	.006/.008 (.15-.2)	.006/.008 (.15-.20)	.013/.015 (.33-.38)

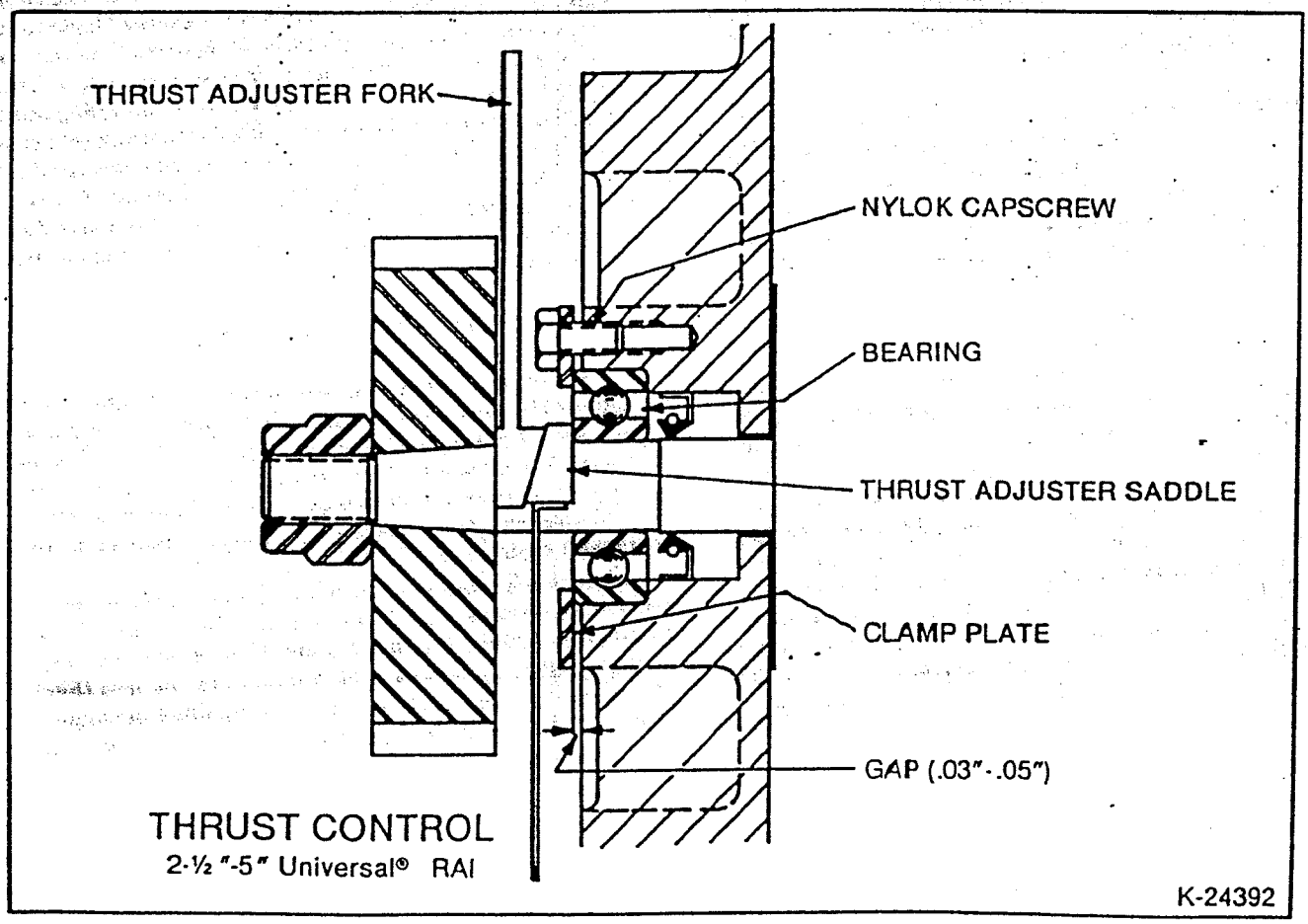

Figure 6 — Thrust Setting, 2½"-5" Universal® RAI

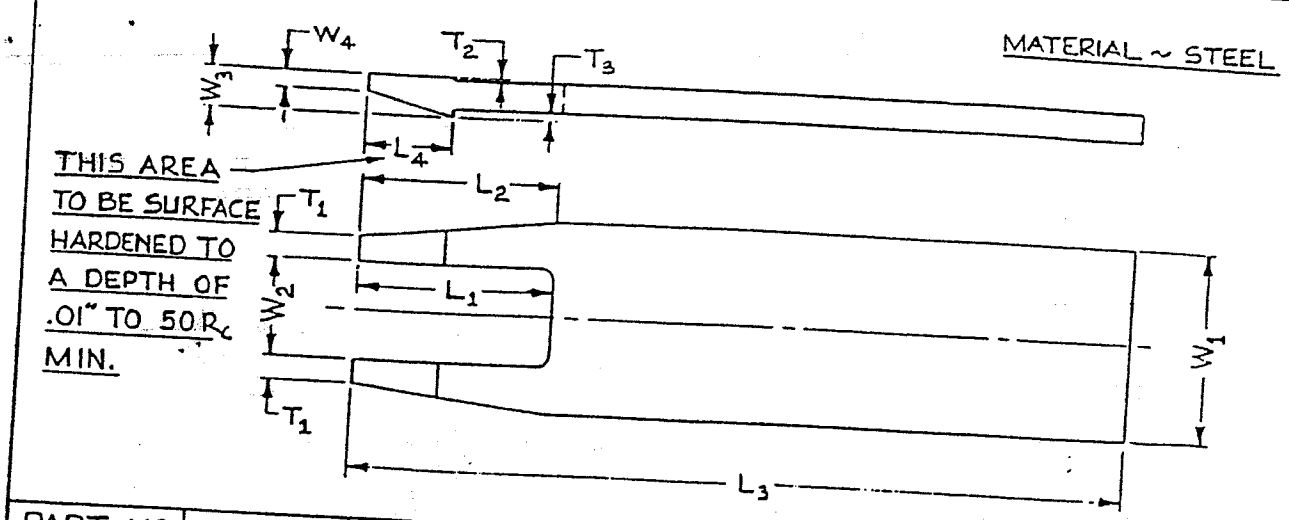

PART Nº	BLW. SIZE	L_1	L_2	L_3	L_4	W_1	W_2	W_3	W_4	T_1	T_2	T_3	NOTES
812-973-001	2 1/2"	1 3/4	1 3/4	6 1/2	9/16	1 3/8	11/16	1/4	1/8	7/32	1/32	1/32	
812-973-002	3 1/2"	2	2	7	7/8	1 1/2	13/16	5/16	1/16	7/32	1/32	1/16	
812-973-003	4"	2	2	7 1/2	1	1 3/4	1 1/32	3/8	1/16	1/4	1/32	1/32	
812-973-004	5"	2 1/4	2 1/4	8	7/8	2	1 1/4	13/32	3/16	1/4	1/32	1/16	

Figure 7 — Thrust Adjuster Fork

812-973

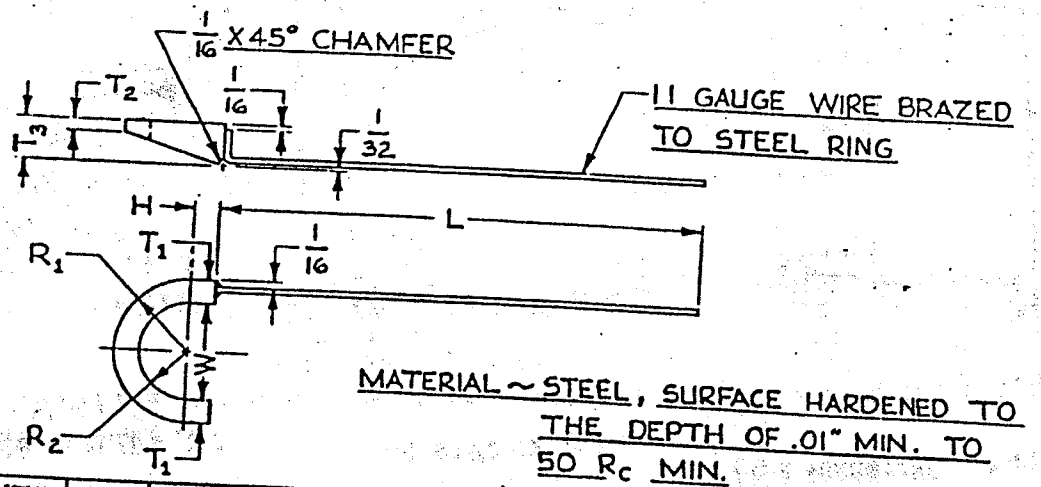

PART Nº	BLW. SIZE	R_1	R_2	W	T_1	T_2	T_3	H	L	NOTES
812-974-001	2 1/2"	15/32	11/32	11/16	1/8	1/16	1/4	3/16	3	
812-974-002	3 1/2"	5/8	13/32	13/16	7/32	1/16	5/16	3/16	3 1/2	
812-974-003	4"	49/64	33/64	1 1/32	1/4	1/8	7/16	1/4	4	
812-974-004	5"	7/8	5/8	1 1/4	1/4	1/8	7/16	1/4	5	

Figure 8 — Thrust Adjuster Saddle

812-974

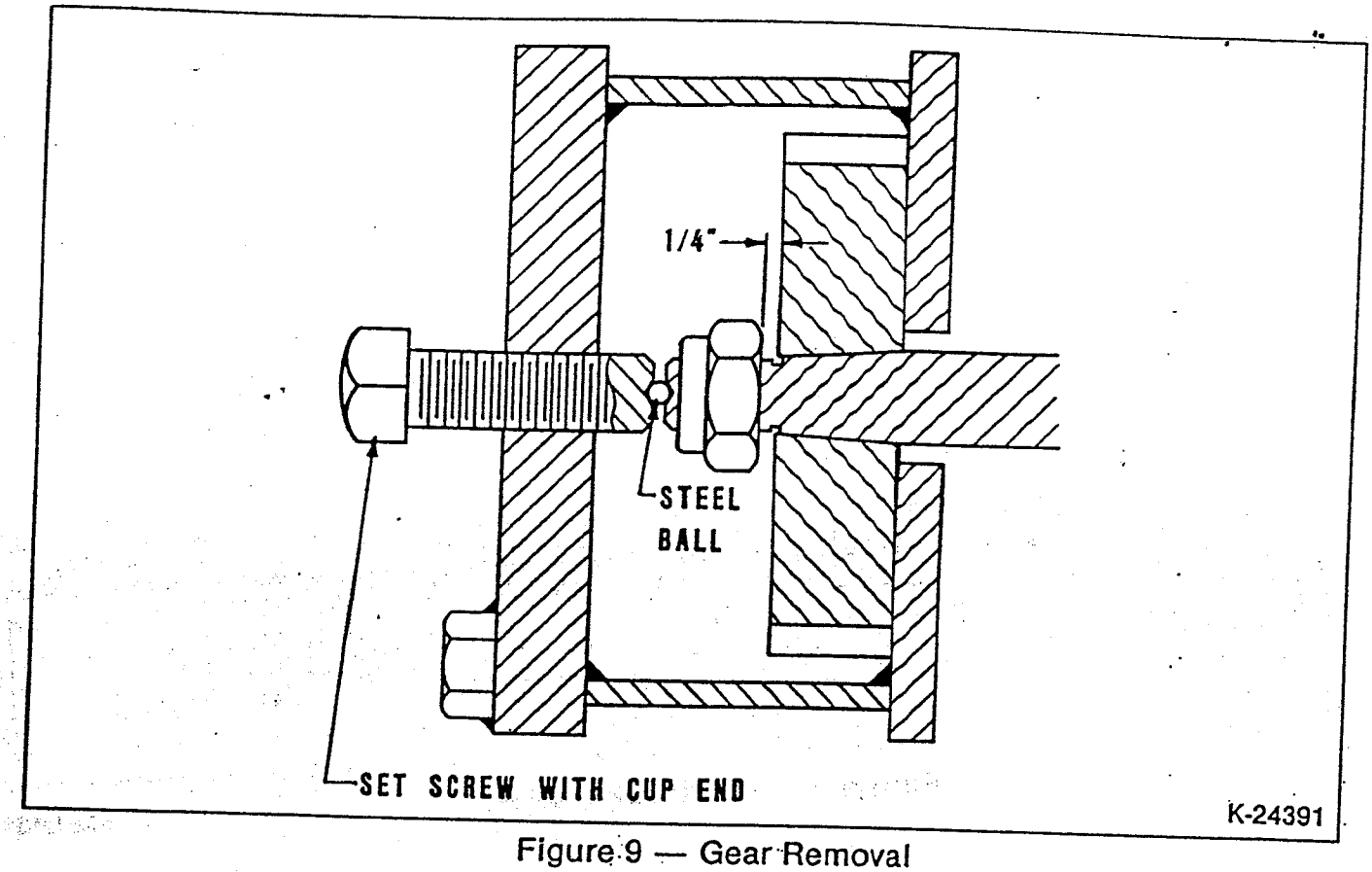

Figure 9 — Gear Removal

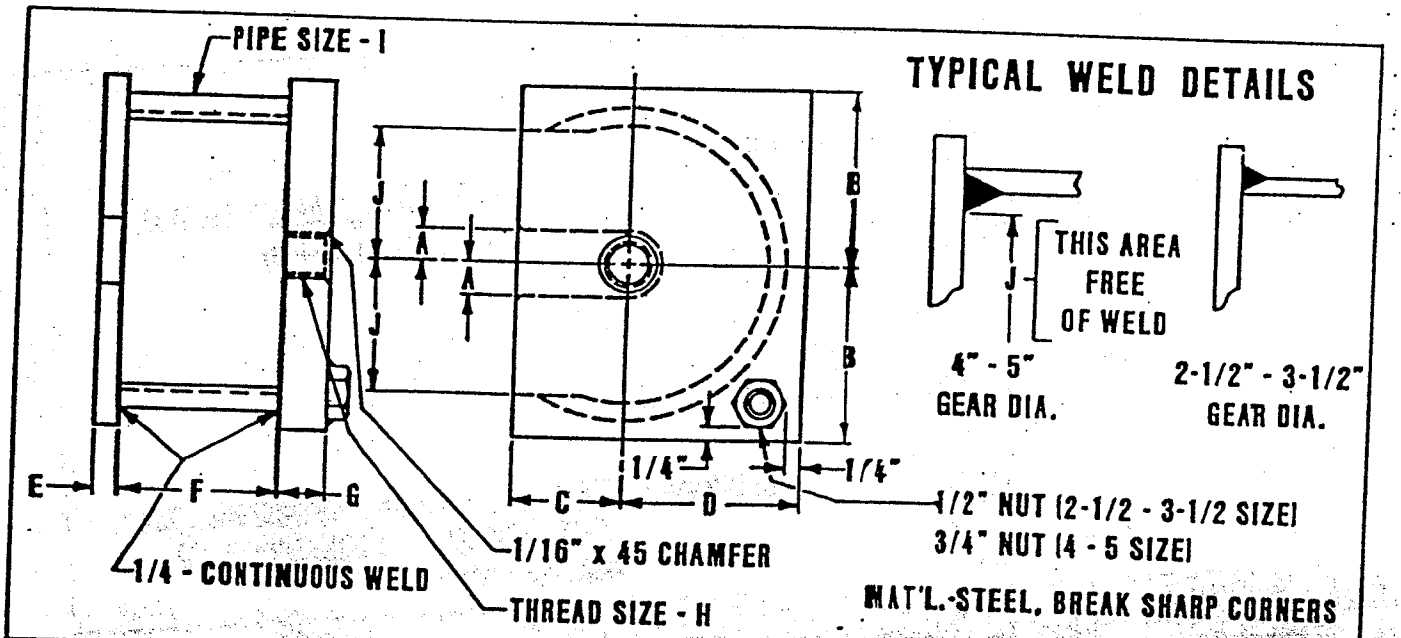

BLOWER SIZE	PART NO.	A	B	C	D	E	F	G	H	I	J
2-1/2	812-977-001	3/8	2	1-1/16	2	1/4	2	5/8	7/16-14	3" SCH. - 40	1-3/8
3-1/2	812-977-002	7/16	2-1/2	1-1/4	2-1/2	5/16	2-3/8	3/4	1/2-13	4" SCH. - 40	1-7/8
4	812-977-003	17/32	2-13/16	1-3/4	2-13/16	3/8	2-1/2	3/4	5/8-11	5" SCH. - 40	2-1/8
5	812-977-004	5/8	3-3/8	2	3-3/8	7/16	3	1	3/4-10	6" SCH. - 40	2-11/16

Figure 10 — Gear Pullers for Universal® RAI with Tapered Gear Bores

812-977-

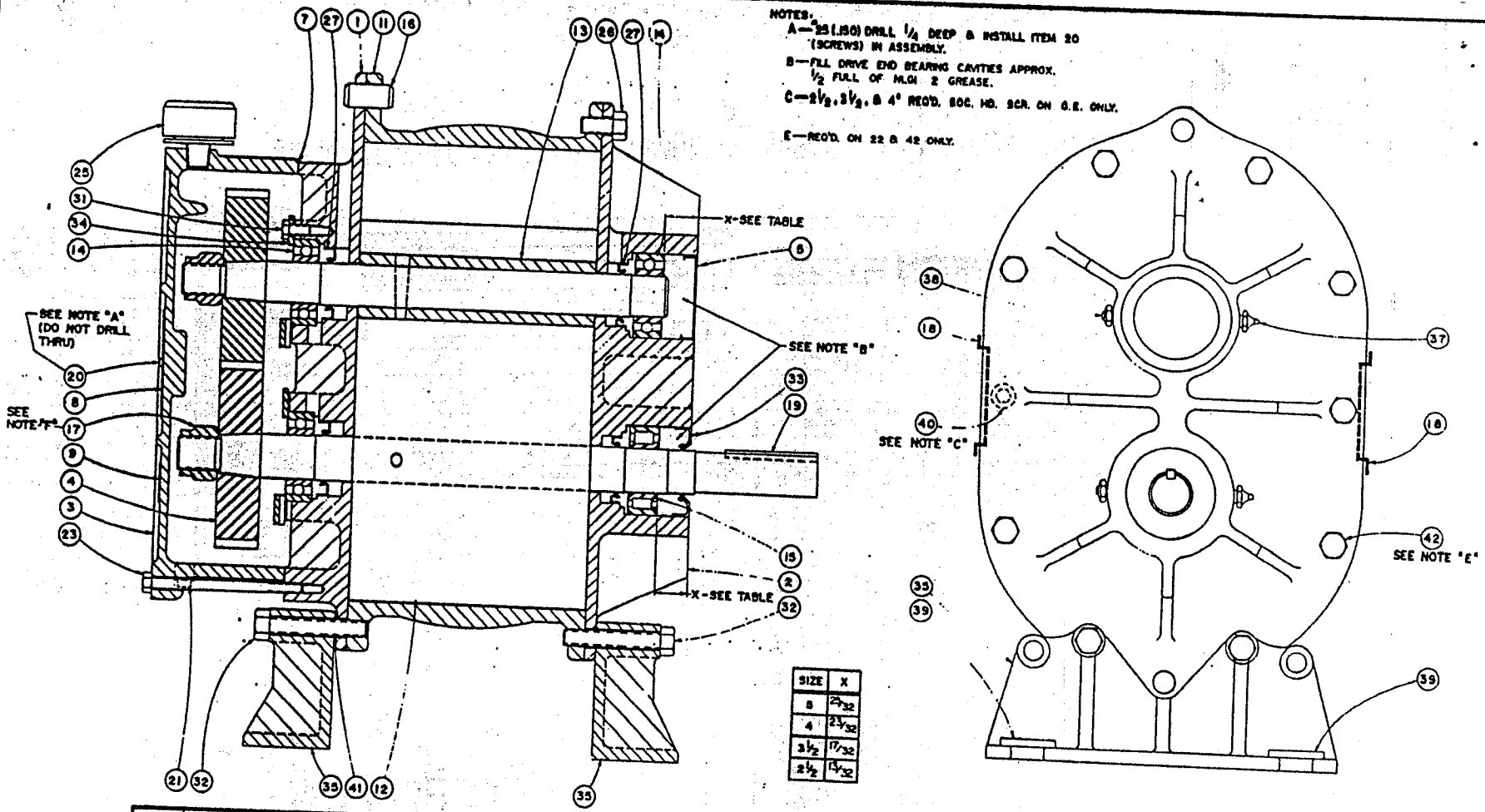

ITEM	PART NAME	ITEM	PART NAME	ITEM	PART NAME	ITEM	PART NAME
1	Headplate Gear End	12	Impeller & Shaft-Drive	21	Plug, Pipe	35	Foot
2	Headplate Drive End	13	Impeller & Shaft-Driven	23	Screw, Hex	37	Fitting, Grease
3	Gearbox	14	Bearing G.E.,-Driven	25	Breather	38	Fitting, Relief
4	Gears	15	Bearing D.E.-Drive	26	Screw, Hex	7	Gasket
5	Cover-Blind	16	Pin, Dowel	27	Seal, Lip	39	Washer Flat
8	Nameplate-Serial Number	17	Gear Nut	31	Screw, Hex	40	Screw Socket
9	Nameplate-Lub	18	Plug Tin	32	Screw, Hex	41	Washer
		19	Key	33	Seal Lip-Drive	42	Screw Hex
11	Cylinder	20	Screw, Self Tap	34	Clamp Plate		

Figure 11 — Assembly of Universal® RAI Blowers, 2½"-5" Gear Diameter

864-720-023

FRAME	APPROX. OIL CAPACITY	
	VERTICAL	HORIZONTAL
2-1/2	3.4 FL. OZ.	6.1 FL. OZ.
3-1/2	8.5 FL. OZ.	16 FL. OZ.
4	12.7 FL. OZ.	22.8 FL. OZ.
5	16.0 FL. OZ.	27.6 FL. OZ.

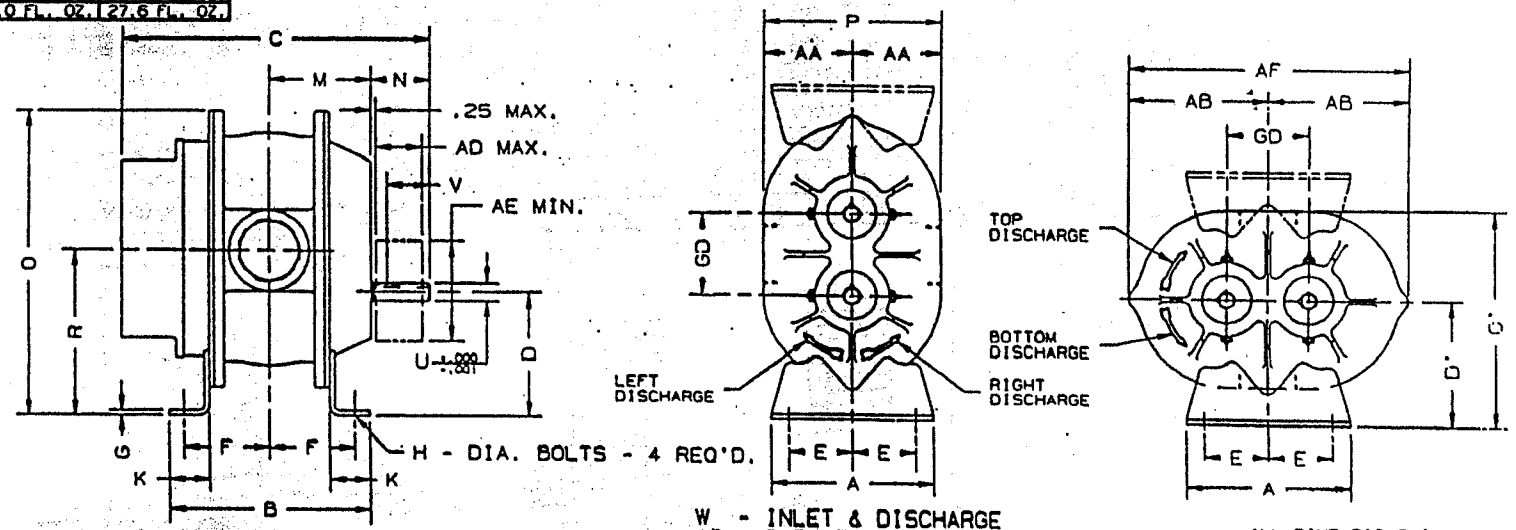

UNIVERSAL RAI BLOWER

W - INLET & DISCHARGE
AD - SHEAVE WIDTH
AE - SHEAVE DIAMETER

ALL DIMENSIONS IN INCHES

FRAME SIZE	GD	A	B	C	D	D'	E MIN.	E MAX.	F MIN.	F MAX.	G	H	K	M	N	O	O'	P	R	U	KEYWAY	W NPT.	V	AA	AB	AD	AE	AF	APPROX. WT. LBS
22	2.5	5.13	5.00	9.75	3.75	3.75	1.50	2.00	2.00	2.00	.25	.38	1.25	2.63	2.50	9.63	6.88	6.25	5.00	.625	.188 x .094	1"	1.81	3.13	4.63	1.75	4.00	9.25	32
24	"	"	7.00	11.75	"	"	"	"	3.00	3.00	"	"	"	3.63	"	"	"	"	"	"		2"	"	"	"	"	"	"		45
32	3.50	7.25	6.75	11.25	5.00	5.00	2.50	2.88	2.56	2.81	.25	.44	1.25	3.38	2.44	12.81	8.88	7.75	6.75	.750	.188 x .094	1-1/4"	1.63	3.88	6.06	1.91	5.00	12.13	69
33	"	"	7.63	12.13	"	"	"	"	3.00	3.25	"	"	"	3.81	"	"	"	"	"	"		2"	"	"	"	"	"	"		74
36	"	"	10.00	14.63	"	"	"	"	4.18	4.44	"	"	"	5.00	2.56	"	"	"	"	"		2-1/2"	1.75	"	"	"	"	"	102
42	4.00	8.00	7.25	13.00	6.25	6.25	3.00	3.13	2.50	3.13	.31	.44	2.00	3.88	3.18	15.06	10.63	8.75	8.25	.875	.188 x .094	1-1/2"	2.31	4.38	6.81	2.31	5.00	13.63	88
45	"	"	10.00	15.50	"	"	"	"	3.56	4.25	"	"	"	5.06	2.94	"	"	"	"	"		2-1/2"	2.13	"	"	"	"	"	103
47	"	"	11.75	17.63	"	"	"	"	4.63	5.38	"	"	"	5.94	3.31	"	10.50	8.50	"	"		3"	2.50	4.25	"	"	"	"	128
53	5.00	10.50	8.38	15.38	6.25	6.75	3.50	3.50	3.18	3.68	.25	.50	1.88	4.50	3.68	17.38	11.88	10.25	8.75	1.125	.25 x .125	2-1/2"	2.75	5.13	8.63	3.06	6.00	17.25	143
55	"	"	11.00	18.00	"	"	"	"	4.25	5.00	"	"	"	5.81	3.38	"	12.25	11.00	"	"	"	4"	3.50	5.50	"	"	"	"	170
59	"	"	14.00	21.00	"	"	"	"	6.00	6.50	"	"	"	7.31	3.88	"	"	"	"	"	"	4"	3.00	"	"	"	"	"	204

CERTIFIED CORRECT FOR
CUSTOMER ORDER No. _____
ROOTS ORDER No. _____
DATE _____

V-BELT DRIVE DATA	
BELTS	
DRIVE SHEAVE	
DRIVEN SHEAVE	
CENTER DISTANCE	

ROOTS DRESSER

DRESSER INDUSTRIES, INC.
ROOTS DIVISION
900 WEST MOUNT STREET
CONNERSVILLE, INDIANA 47331

DB 8/29 54
FCR

862-795-021

PRINTED IN U.S.A. /PARTS/XXAD REV DIM A 22L24/10-11-84 ADDED WEIGHTS/10-23-84 REV DIM F/3-8-85 REV DIM U/5-85 REV AD DIM/REW/10-7-86 REV FRAME 59/REW/6-9-88 ADDED FRAME 32/RVL/6-22-90 CORRECTED FRAME 36 REW 8-11-94

Figure 12 — Dimensional Assembly of Universal® RAI Blower (2½"-5")

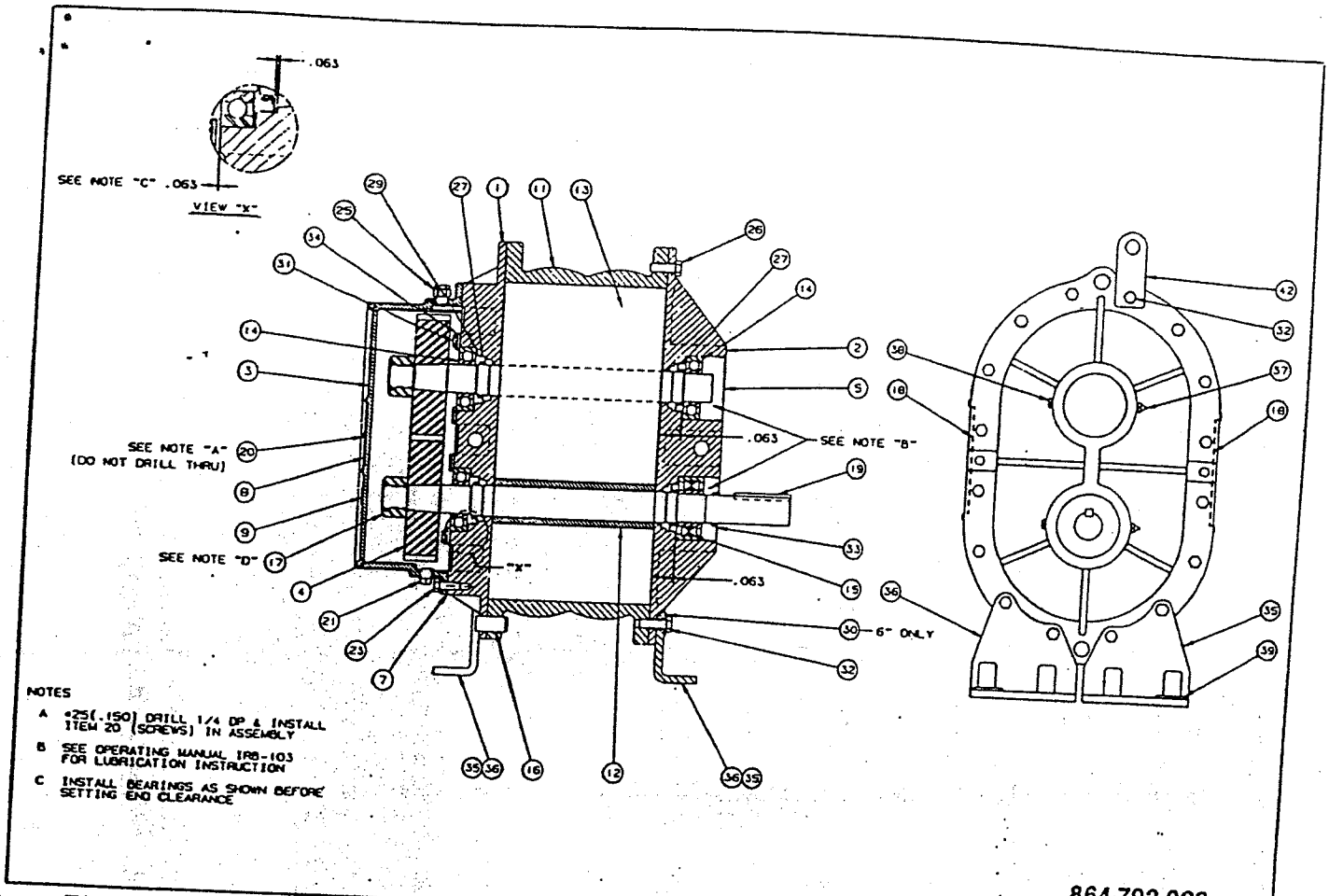

864-792-023

Figure 13 — Assembly of Universal® RAI Blowers, 6" and 7" Gear Diameter

PARTS LIST FOR 6"-7" UNIVERSAL® RAI

ITEM	PART NAME	ITEM	PART NAME	ITEM	PART NAME	ITEM	PART NAME
1	Headplate - G.E.	13	Imp & Shaft - Drvn	25	Plug - Vent	36	Foot - Lt. Hand
2	Headplate - D.E.	14	Bearing, Ball	26	Screw, Cap - Hex	37	Fitting, Grease
3	Gearbox	15	Bearing, Roller	27	Seal, Lip	38	Plug - Vent
4	Gear Assembly	16	Pin, Dowel	29	Washer - Wavy Spr.	39	Washer - Oblong
5	Plug - Opening	17	Nut, Stop - Hex	30	Washer	40	Pipe - Tbe. (Close)
7	Gasket, Gearbox	18	Plug - Opening	31	Screw, Cap Hex	41	Coupling - Pipe
8	Nameplate - S/N	19	Key, Square	32	Screw, Cap Hex	42	Lifting Lug
9	Nameplate - Lube	20	Screw, Rd. Hd.	33	Seal, Lip		
11	Cylinder	21	Plug, Pipe - Sq. Hd.	34	Brg. Clamp Plate		
12	Imp & Shaft — Drive	23	Screw, Cap - Hex	35	Foot - Rt. Hand		

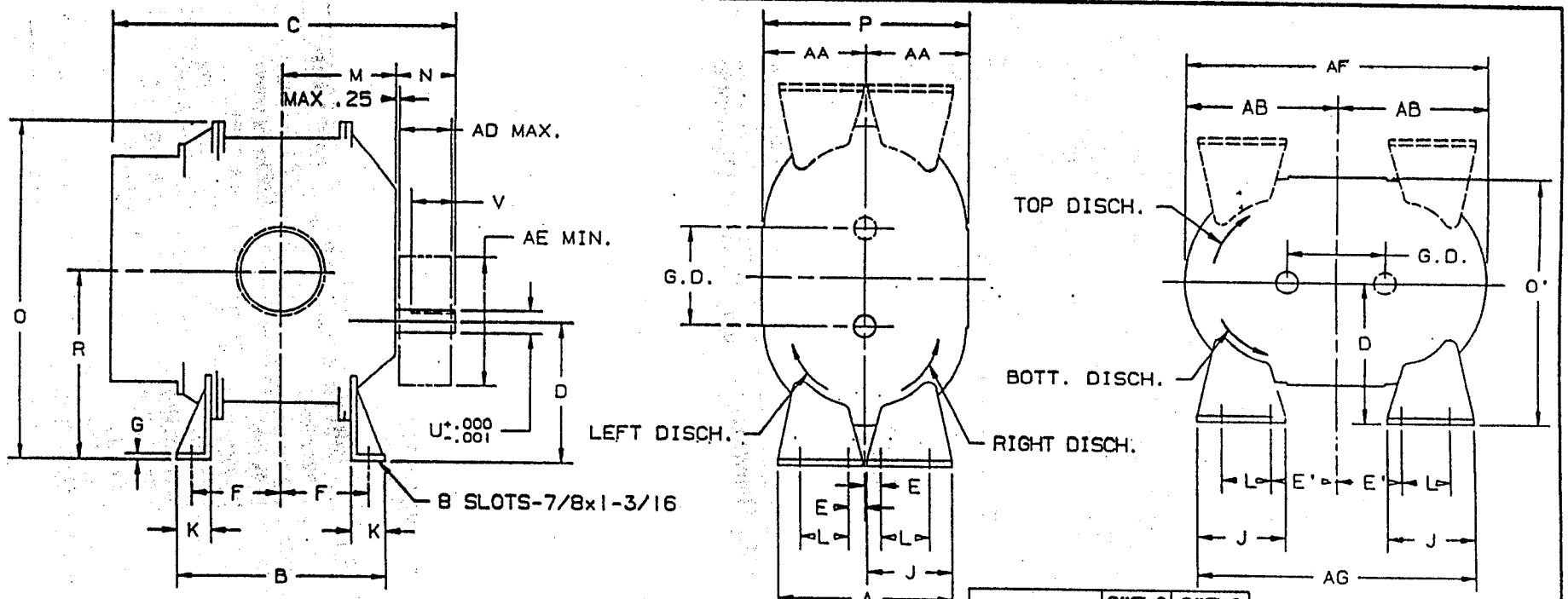

UNIVERSAL® RAI BLOWER

UNIT SIZE	APPROX. OIL CAP. VERT.	APPROX. OIL CAP. HORIZ.	G.D.
6"	28.3 FL OZ	52.1 FL OZ	6.00
7"	32.3 FL OZ	59.5 FL OZ	7.00

	6"FLG	8"FLG
OPENING	6.00	8.00
BOLT CIRCLE	9.50	11.75
FLANGE O.D.	11.00	13.50
NO. TAPPED HOLES	8	8
SIZE HOLES	3/4-10	3/4-10
TAP DEPTH	1.13	1.13

W-INLET
W'-DISCHARGE
AD-SHEAVE WIDTH
AE-SHEAVE DIA.
ALL DIM. IN INCHES

FRAME SIZE	A	B	C	D	E	E'	F	G	J	K	L	M	N	O	O'	P	R	U	V	KEYWAY	W	W'	AA	AB	AD	AE	AF	AG	APPROX WEIGHT
65	11.00	10.00	18.38	8.75	1.00	4.00	3.81	.38	5.38	2.13	3.00	5.63	3.56	21.63	15.13	12.75	11.75	1.375	2.75	.312x.156	3"NPT	3"NPT	6.38	9.89	3.44	8.00	19.75	17.00	245 LBS
68	"	13.00	21.38	"	"	"	5.31	"	"	"	"	7.13	3.69	"	"	"	"	"	"	"	5"NPT	5"NPT	"	"	"	"	"	"	285 LBS
615	"	20.00	28.38	"	"	"	8.81	"	"	"	"	10.63	"	"	16.25	15.00	"	"	"	"	6"FLG	6"FLG	7.50	"	"	"	"	"	425 LBS
76	14.00	11.75	19.94	11.00	2.00	5.50	4.88	.50	6.75	2.38	3.50	5.94	4.06	26.13	20.69	19.38	14.5	1.562	3.00	.375x.188	4"NPT	4"NPT	9.69	11.63	3.75	9.50	23.25	21.00	400 LBS
711	"	16.75	25.19	"	"	"	7.38	"	"	"	"	8.44	4.31	"	19.50	17.00	"	"	"	"	6"FLG	6"FLG	8.50	"	"	"	"	"	530 LBS
718	"	23.75	32.19	"	"	"	10.88	"	"	"	"	11.94	"	"	"	"	"	"	"	"	8"FLG	8"FLG	"	"	"	"	"	"	650 LBS

862-753-021

Figure 14 — Dimensional Assembly of Universal® RAI Blower (6" & 7")

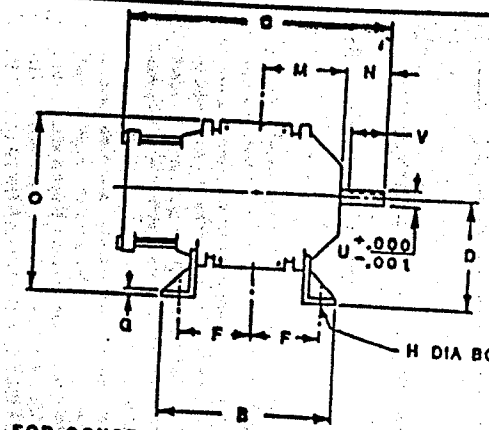

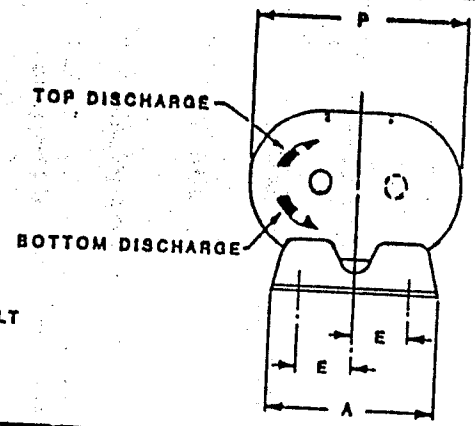

NOTE:
UNIVERSAL® RAI

1. 45 & 56 U-RAI WILL HAVE TO RUN AT REDUCED SPEED TO DUPLICATE AF PERFORMANCE.
2. LARGER STANDARD SHAFT THAN AF. SEE DIMENSION "U".
3. U-RAI INLET & OUTLET CONNECTIONS ARE LARGER THAN AF ON THE FOLLOWING SIZES: 24, 45, 47, 56 & 59.
4. 45 U-RAI REPLACES 44 AF. 56 U-RAI REPLACES 55 AF.
5. FOR ADDITIONAL INFORMATION CONTACT YOUR SALES REPRESENTATIVES OR THE FACTORY.

W-INLET & DISCHARGE

ALL DIMENSIONS IN INCHES

DIMENSIONS NOT CERTIFIED FOR CONSTRUCTION

FRAME SIZE	A	B	C	D	E	F	H	M	N	O	P	U	V	KEYWAY	W
22 U-RAI	5.13	5.00	9.75	3.75	2.00	2.00	3/8	2.63	2.50	6.88	9.25	.625	1.81	3/16 x 3/32	1" NPT
22 AF	5.50	5.06	9.13	3.75	2.00	2.00	3/8	2.63	1.94	6.86	9.25	.5875	1.31	3/16 x 3/32	1" NPT
24 U-RAI	5.13	7.00	11.75	3.75	2.00	3.00	3/8	3.63	2.50	6.88	9.25	.625	1.81	3/16 x 3/32	2" NPT
24 AF	5.50	7.06	11.13	3.75	2.00	3.00	3/8	3.63	1.94	6.88	9.25	.5875	1.31	3/16 x 3/32	1-1/2" NPT
33 U-RAI	7.25	7.63	12.13	5.00	2.88	3.00	3/8	3.81	2.44	8.88	12.13	.750	1.63	3/16 x 3/32	2" NPT
33 AF	7.25	7.44	12.56	5.00	2.88	3.00	3/8	3.81	2.63	8.88	12.13	.6562	1.66	3/16 x 3/32	2" NPT
36 U-RAI	7.25	10.00	14.63	5.00	2.88	4.18	3/8	5.00	2.56	8.88	12.13	.750	1.75	3/16 x 3/32	2-1/2" NPT
36 AF	7.25	9.81	14.94	5.00	2.88	4.18	3/8	5.00	2.63	8.88	12.13	.6562	1.88	3/16 x 3/32	2-1/2" NPT
42 U-RAI	8.00	7.25	13.00	6.25	3.13	2.94	3/8	3.68	3.18	10.63	13.63	.875	2.31	3/16 x 3/32	1-1/2" NPT
42 AF	8.25	7.13	12.88	6.25	3.13	2.94	3/8	3.68	3.00	10.63	13.63	.7812	2.38	3/16 x 3/32	1-1/2" NPT
45 U-RAI	8.00	10.00	15.50	6.25	3.13	3.56	3/8	5.06	2.94	10.63	13.63	.875	2.13	3/16 x 3/32	2-1/2" NPT
44 AF	8.25	8.83	14.13	6.25	3.13	3.56	3/8	4.31	3.00	10.63	13.63	.7812	2.38	3/16 x 3/32	2" NPT
47 U-RAI	8.00	11.75	17.63	6.25	3.13	5.18	3/8	5.94	3.31	10.50	13.63	.875	2.50	3/16 x 3/32	3" NPT
47 AF	8.25	11.63	17.38	6.25	3.13	5.18	3/8	5.94	3.00	10.63	13.63	.7812	2.30	3/16 x 3/32	2-1/2" NPT
53 U-RAI	10.50	8.38	15.38	6.75	4.25	3.69	3/8	4.50	3.66	11.88	17.25	1.125	2.75	1/4 x 1/8	2-1/2" NPT
53 AF	10.75	8.81	15.44	6.75	4.25	3.69	3/8	4.50	3.63	12.00	17.25	.9687	2.88	1/4 x 1/8	2-1/2" NPT
56 U-RAI	10.50	11.00	18.00	6.75	4.25	4.25	3/8	5.81	3.38	12.25	17.25	1.125	2.50	1/4 x 1/8	4" NPT
55 AF	10.75	9.81	16.56	6.75	4.25	4.25	3/6	5.06	3.63	12.00	17.25	.9687	2.88	1/4 x 1/8	2-1/2" NPT
59 U-RAI	10.50	14.00	21.18	6.75	4.25	6.50	3/8	7.31	3.38	12.25	17.25	1.125	3.00	1/4 x 1/8	4" NPT
59 AF	10.75	14.31	21.06	6.75	4.25	6.50	3/6	7.31	3.63	12.00	17.25	.9687	2.88	1/4 x 1/8	3" NPT

PRINTED IN U.S.A.

ROOTS DRESSER

DRESSER INDUSTRIES, INC.
ROOTS OPERATIONS
900 WEST MOUNT STREET,
CONNERSVILLE, INDIANA 47331

COMPARING ROOTS UNIVERSAL® RAI TO ROOTS AF

DB 1-7-85

863-813-021

Figure 15

Major Changes when Replacing AF with Universal® RAI Blower

Size & Type	Sheave Bushing Dia.	Inlet Size	Disch. Size	Mounting Feet
22 Universal® RAI	.625"	1"	1"	Interchangeable
22 AF	.5875"	1"	1"	
24 Universal® RAI	.625"	2"	2"	Interchangeable
24 AF	.5875"	1½"	1½"	
32 Universal® RAI	.750"	2"	2"	Interchangeable
32 AF	.6562"	2"	2"	
33 Universal® RAI	.750"	2"	2"	Interchangeable
33 AF	.6562"	2"	2"	
36 Universal® RAI	.750"	2½"	2½"	Interchangeable
36 AF	.6562"	2½"	2½"	
42 Universal® RAI	.875"	1½"	1½"	Interchangeable
42 AF	.7812"	1½"	1½"	
45 Universal® RAI	.875"	2½"	2½"	Reverse Feet
44 AF	.7812"	2"	2"	
47 Universal® RAI	.875"	3"	3"	Interchangeable
47 AF	.7812"	2½"	2½"	
53 Universal® RAI	1.250"	2½"	2½"	Special Feet
53 AF	.9687"	2½"	2½"	
56 Universal® RAI	1.250"	4"	4"	Special Feet
55 AF	.9687"	2½"	2½"	
59 Universal® RAI	1.250"	4"	4"	Special Feet
59 AF	.9687"	3"	3"	

*To maintain AF performance with Universal® RAI, the blower speed will have to be reduced by sheave change. See enclosed dimension drawing for your specific blower.

CAUTION CAUTION CAUTION

MAKE CERTAIN THAT THE BREATHER IS LOCATED ON TOP AND THE DRAIN PLUG IN THE BOTTOM OF THE GEAR BOX.

GENERAL TERMS

CONTRACT PERFORMANCE, INSPECTION AND ACCEPTANCE

A. Unless Seller specifically assumes installation, construction or start-up responsibility, all products shall be finally inspected and accepted within thirty (30) days after receipt at point of delivery. Products not covered by the foregoing and all work shall be finally inspected and accepted within thirty (30) days after completion of the applicable work by Seller. All claims whatsoever by Buyer (including claims for shortages) excepting only those provided for under the WARRANTY AND LIMITATION OF LIABILITY and PATENTS Clause hereof must be asserted in writing by Buyer within said thirty (30) day period or they are waived. If this contract involves partial performance, all such claims must be asserted within said thirty (30) day period for each partial performance. There shall be no revocation of acceptance.

Rejection may be only for defects substantially impairing the value of products or work and Buyer's remedy for lesser defects shall be those provided for under the WARRANTY AND LIMITATION OF LIABILITY Clause.

B. Seller shall not be responsible for nonperformance or delays in performance occasioned by any causes beyond Seller's reasonable control, including, but not limited to, labor difficulties, delays of vendors or carriers, fires, governmental actions and material shortages. Any so occasioned shall effect a corresponding extension of Seller's performance dates which are, in any event, understood to be approximate. In no event shall Buyer be entitled to incidental or consequential damages for late performance or a failure to perform.

TITLE AND RISK OF LOSS

Full risk of loss (including transportation delays and losses) shall pass to the Buyer upon delivery of products to the f.o.b. point or if Seller consents to a delay in shipment beyond the contract date at the request of the Buyer, upon notification by the Seller that the products are manufactured.

WARRANTY AND LIMITATION OF LIABILITY

A. Seller warrants that its products and parts, when shipped, and its work (including installation, construction and start-up), when performed will meet all applicable specifications and other specific product and work requirements (including those of performance), if any, of this agreement, will be of good quality and will be free from defects in material and workmanship. All claims for defective products or parts under this warranty must be made in writing immediately upon discovery and, in any event, within one (1) year from shipment of the applicable item and all claims for defective work must be made in writing immediately upon discovery and in any event within one (1) year of completion thereof by Seller. Defective items must be held for Seller's inspection and returned to the original f.o.b. point upon request. THE FOREGOING IS EXPRESSLY IN LIEU OF ALL OTHER WARRANTIES WHATSOEVER, EXPRESS, IMPLIED AND STATUTORY, INCLUDING WITHOUT LIMITATION, THE IMPLIED WARRANTIES OF MERCHANTABILITY AND FITNESS.

B. Upon Buyer's submission of a claim as provided above and its substantiation, Seller shall at its option either (i) repair or replace its product, part or work at the original f.o.b. point of delivery, or (ii) refund an equitable portion of the purchase price.

C. The warranty specified herin shall apply to this contract, but it is specifically understood that products sold hereunder are not warranted for operation with erosive or corrosive fluids or those which may tend to build-up within the product quoted. No product or part shall be deemed to be defective by reason of failure to resist erosive or corrosive action of any fluid and Buyer shall have no claim whatsoever against Seller therefore, nor for problems resulting from build-up of material within the unit.

D. The foregoing is Seller's only obligation and Buyer's only remedy for breach of warranty, and except for gross negligence, willful misconduct and remedies permitted under the CONTRACT PERFORMANCE, INSPECTION AND ACCEPTANCE and the PATENTS Clause hereof, the foregoing is Buyer's only remedy hereunder by way of breach of contract, tort or otherwise. In no event shall Buyer be entitled to incidental or consequential damages. Any action for breach of this agreement must commence within two (2) years after the cause of action has accrued.

REPAIR KIT INFORMATION

UNIVERSAL® RAI

REF. NO.	QTY.	PART DESCRIPTION	REPAIR KIT PART NOS. FRAME SIZE	REPAIR KIT NO.
4	1 Pr.	Timing Gear	2″	65-101-ORK
5	1	Plug — Opening	3″	65-104-ORK
7	1	Gasket	4″	65-107-ORK
14	1	Bearing, D.E. — DRVN	5″	65-111-ORK
14	2	Bearing, G.E.	*6″	65-115-ORK
15	1	Bearing, Dr. Shaft	*7″	65-119-ORK
17	1	Gear Nut		
27	2	Seals, D.E.		
27	2	Seals, G.E.		
31	4	Capscrew — Selflock		
33	1	Seal — Dr. Shaft		

*Repair kits for the 6" and 7" Universal® RAI do not contain gears.

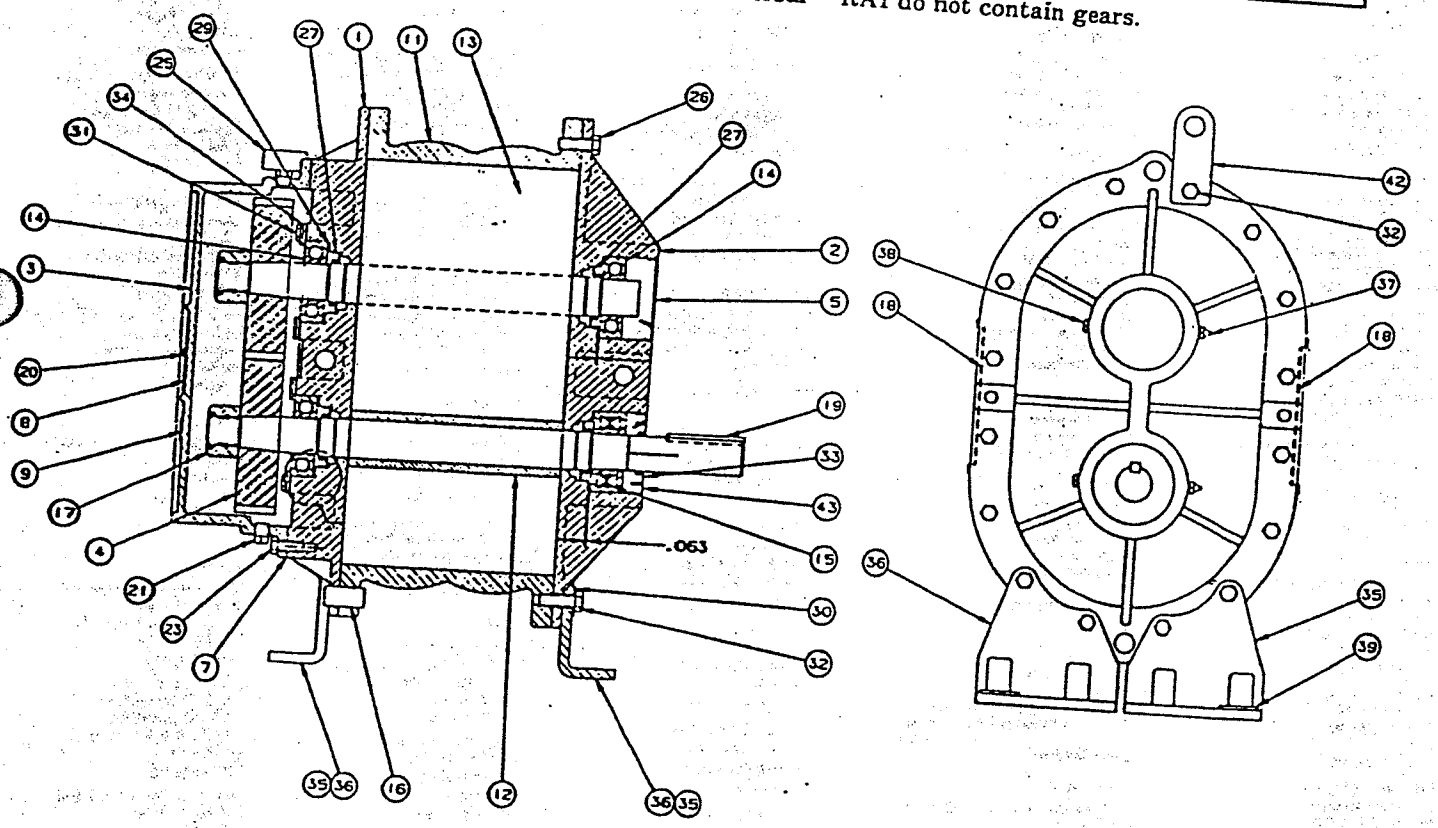

SEE BACK COVER FOR NEAREST DISTRIBUTOR.

ROOTS AUTHORIZED DISTRIBUTOR LIST

ALABAMA
*Jim House & Associates, Inc.
P.O. Box 320192
Birmingham, AL 35232
16 N. 49th St. (35222)
205/592-6302
Fax: 205/592-6209

ARKANSAS
*Arkansas Industrial Machy.
3804 N. Nona Street
Little Rock, AR 72115
501/758-2745
Fax: 501/758-3223

CALIFORNIA
*American Compressor Co.
10144 Freeman Avenue
Santa Fe Springs, CA 90670
310/944-6188
Fax: 310/946-8365

J. J. Ben Co.
P.O. Box 4644
Walnut Creek, CA 94596
3000 Citrus Circle
Suite 220 Zip 94598 (shipping)
510/944-0494
Fax: 510/947-3978

COLORADO
Fluid Technology, Inc.
1315 Nelson #H
Lakewood, CO 80215
303/233-7400
Fax: 303-233-0093

CONNECTICUT
Argo Industries
101 Goodwin Street
East Hartford, CT 06108
203/528-8454
Fax: 203/528-7392

FLORIDA
*Barney's Pumps, Inc.
3907 Highway 98 South
P.O. Box 3529
Lakeland, FL 33802-3529
813/665-8500
Fax: 813/666-3858

Barney's Pumps, Inc.
5601 Powerline Rd.
Suite 408
Ft. Lauderdale, FL 33309
305/771-8411 (Broward)
305/945-0279 (Dade)
Fax: 305/771-8440

Barney's Pumps of Jacksonville
11306 Business Prk. Blvd.
P.O. Box 56170
Jacksonville, FL 32241-6170
904/260-0669
Fax: 904/260-4913

GEORGIA
*Pye Barker Supply Co.
21 Royal Drive
P.O. Drawer M
Forest Park, GA 30050
404/363-6000
Fax: 404/361-8579

Pye Barker Supply Co.
2805 Palmyra Rd.
Albany, GA 31707
912/436-2479
Fax: 912/883-6222

Pye Barker Supply Co.
11 Magazine Avenue
Savannah, GA 31042
912/238-0303
Fax: 912/238-6214

HAWAII
*Foster Equipment Co.
719 Ahua Street
Honolulu, HI 96820-0188
808/839-7731
Fax:

ILLINOIS
*AMCO Industries
Compressor Engrg. Co.
625 District Drive
Itasca, IL 60143
708/773-1100
Fax: 708/773-1063

*Cochrane Comp. Serv & Sup Co.
4533 West North Ave.
Melrose Park, IL 60160
708/345-0225
Fax: 708/345-1339

*Cochrane Compressor Co.
505 North Madison
Rockford, IL 61107
815/965-1860
Fax: 815/965-1874

Cochrane Compressor
819 S.W. Adams
Peoria, IL 61602
309/674-9104
Fax: 309/674-5242

*Cochrane Compressor Co.
2209 3rd Avenue
Rock Island, IL 61201
309/786-7739

INDIANA
*Powered Equip. & Repair
600 Voorhees
Terre Haute, IN 47802
812/232-0241
Fax: 812/232-0055

AMCO Industries (No. IN only)
Compressor Engineering Co.
1944 Griffith Blvd., Unit "E"
Griffith, IN 46319
219/923-8300
Fax: 219/923-8324

KANSAS
*Pump & Power Equip., Inc.
9010 Rosehill Road
Lenexa, KS 66215
913/492-7991
Fax: 913/492-7994

KENTUCKY
*Air Systems, Inc.
4512 Bishop Lane
Louisville, KY 40218
502/452-6312
Fax: 502/458-0791

LOUISIANA
*Delta Process Equip.
9929 Florida Blvd.
P.O. Box 969 (77027)
Denham Springs, LA 70726
504/665-1666
Fax: 504/665-1855

*Gulf States Engrg.
252 Harbor Circle
P.O. Box 26156
New Orleans, LA 70126
504/241-8510
Fax: 504/242-0844

MARYLAND
*Cole Compressor
1201A Ridgely Street
Baltimore, MD 21230
410/539-3883
Fax: 410/539-3905.

*Tate Eastern Shore
R.D. 3, Box 858
Delmar, MD 21875
301/546-3293
Fax: 301/546-3461

MASSACHUSETTS
*PEECO, Inc.
10 Brent Drive
P.O. Box 497
Hudson, MA 01749
508/562-9112
Toll Free: 800/762-9720 (MA only)
800/225-9242 (CT, ME, NH, RI & VT)
Fax: 508/562-6915

MICHIGAN
*Detroit Air Compressor & Pump Co.
3205 Bermuda
Ferndale, MI 48220
313/544-2982
Fax: 313/544-2027

*Air Components & Engrg., Inc.
939 Ken-O-Sha Industrial Dr.
P.O. Box 9385
Grand Rapids, MI 49509
616/452-3188
Fax: 616/452-0393

MINNESOTA
*Grubb Equip. - GES SCA
1754 Washington Avenue
Stillwater, MN 55082
612/430-1055
Fax: 612/430-3947

MISSISSIPPI
*Gulf States Engrg.
117 Richardson Dr.
Jackson, MS 39209
601/922-8725
Fax: 601/922-8728

MISSOURI
Cochrane Compressor Service & Supply Company
2207 S. 12th Street
St. Louis, MO 63104
314/772-2888
Fax: 314/772-3087

*St. Louis Compressor Serv. Co.
3863 Laclede Avenue
St. Louis, MO 63108
314/652-3400
Fax: 314/652-3405

NEW JERSEY
Argo Industrial
33 Terminal Avenue
Clark, NJ 07066
201/574-2400

*Argo Compressor & Pump Div.
326 Freylinghuysen Avenue
Newark, NJ 07114
201/242-2305

*Argo Industrial
1707 Imperial Way
Thorofare, NJ 08086
609/848-4200
Fax: 609/848-9077

NEW YORK
*Argo Compressor Serv. Corp.
19-35 Hazen Street
Jackson Hgts., LI, NY 11370
718/726-7800
Fax: 718/274-5041

Hayes Distributors, Inc.
1103-43rd Road
Long Island City, NY 11101
718/784-7965

*Siewert Equipment Co., Inc.
175 Akron Street
Rochester, NY 14609
716/482-9640
Fax: 716/482-4513

NORTH CAROLINA
*Edmac Compressor Co.
P.O. Box 227, 1651 M.L. King Dr.
Winston-Salem, NC 27102
919/725-2395
Fax: 919/725-2161

OHIO
Craun-Liebing Co.
1214 California Avenue
Akron, OH 44314
216/745-6544

SYTEK, IEM Div.
1089 Claycraft Road
Blacklick, OH 43004
614/864-8205
Fax: 614/864-0326

*SYTEK, IEM Div.
6100 Duff Drive
Cincinnati, OH 45246
513/874-5840
Fax: 513/874-5508

Craun-Liebing Co.
11801 Clifton Blvd.
Cleveland, OH 44107
216/228-7900

*SYTEK, IEM Div.
5131 Webster Street
Dayton, OH 45414
513/278-7355
Fax: 513/278-0270

*Tomlin Equipment Co.
242 Poplar Street
Toledo, OH 43605
419/691-3571
Fax: 419/691-1928

*Tomlin Equipment Co.
121 Keep Court
Elyria, OH 44035
216/228-0433
Fax: 216/324-2871

Argo Marine & Industrial
9001 Dutton Drive
P.O. Box 407
Twinsburg, OH 44087
216/425-3121
Fax: 216/425-4612

OKLAHOMA
Duncan Equipment Co.*
1005 South Second
Duncan, OK 73533
405/255-1216
800/375-5216 (in OK)
Fax: 405/255-0409

Duncan Equipmennt Co.*
3709 West Reno
Oklahoma City, OK 73107
405/947-0931
800/375-9470 (in OK)
Fax: 405/942-3735

Duncan Equipment Co.
9751 East 55th Place
Tulsa, OK 74146
918/663-3252
800/375-5678 (in OK)
Fax: 918/664-5720

OREGON
*Rogers Machinery Co., Inc.
14600 S.W. 72nd Avenue
Portland, OR 97223
503/639-6151
Fax: 503/639-1844

PENNSYLVANIA
*Airtek, Inc.
R.D. #3 Arona Road
P.O. Box 466
Irwin, PA 15642
412/351-3837
Fax: 412/864-7853

*Harris Pump & Supply Co.
5501 Campbells Run Road
Pittsburgh, PA 15205
412/787-7867
Fax: 412/787-7696

*R & M Associates
915 Madison Avenue
P.O. Box 920
Valley Forge, PA 19481
215/666-9080
Fax: 215/666-1766

SOUTH CAROLINA
*Edmac Compressor Co.
305 Catawba Street
Columbia, SC 29201
803/252-8000
Fax: 803/254-4898

TENNESSEE
*Wascon, Inc.
Route 4, Box 118
Livingston, TN 38570
615/823-1388
Fax: 615/823-4924

*Arkansas Industrial Machy.
2884 Sanderwood Drive
Memphis, TN 38118
901/363-2200
Fax: 901/363-6804

TEXAS
Air & Pump Co.
585 South Padre Island Dr.
Corpus Christi, TX 78405
512/289-7000
Fax: 512/289-9071

*Dallas Compressor
13717 Neutron Road
Dallas, TX 75234
214/233-9870
Fax: 214/233-1878

*McKenzie Equipment Co.
9260 Bryant Street
P.O. Box 34427
Houston, TX 77234
713/946-1413
Fax: 713/946-0559

*McKenzie Equipment Co.
18523 I.H. 35 North
Schertz, TX 78154-9504
512/651-8314
Fax: 512/651-9620

Duncan Equipment Co.
3511 North Central Freeway
Wichita Falls, TX 76306
817/322-4199
Fax: 817/322-7028

*AAS/UNIMAC
13773 Omega Road
Dallas, TX 75244
214/701-0400
Fax:

UTAH
Compressor Pump & Service
3333 West 2400 South
Salt Lake City, UT 84119
801/973-0154
Fax: 801/973-9546

VIRGINIA
*Engineered Sys. & Prods.
County Route 1, Box 19A
Concord, VA 24538
804/993-2500
Fax: 804/993-3752

*Engineered Sys. & Prods. Co.
8130 Virginia Pine Court
Richmond, VA 23237
804/271-7200
Fax: 804/271-8317

*Clinch River Corp.
Route 6, Box 60
Tazewell, VA 24651
703/988-2548
Fax: 703/988-9325

WASHINGTON
*Rogers Machinery Co., Inc.
1705 Harrison Avenue
P.O. Box 548
Centralia, WA 98531
206/736-9356

*Rogers Machinery Co., Inc.
7800 Fifth Avenue South
Seattle, WA 98108
206/763-2530
Fax: 206/763-1187

*Rogers Machinery Co., Inc.
Spokane Industrial Park
East 16615 Euclid Avenue
Spokane, WA 99216
509/922-0556
Fax: 509/922-0910

WEST VIRGINIA
Guyan Machinery Co.
P.O. Box 150
Chapmanville, WV 25508
304/855-4501
Fax: 304/855-8601

West Virginia Pump & Supply Co.
20 East 24th Street
Huntington, WV 25721
304/529-4161
Fax: 304/522-8361

WYOMING
*Compression & Components Co., Inc.
1907 Salt Creek Hwy.
P.O. Box 879
Mills, WY 82644
307/235-4700
Fax:

CANADA
*Becklagd Equipment Ltd.
3250 Beta Avenue
Burnaby, B.C. V5G 4K4
604/299-8808
Fax: 604/299-6162

*A. G. Dunbar Co., Ltd.
10 Morris Drive, Unit 9
Burnside Industrial Park
Dartmouth, N.S. B3B 1K8
902/469-0981
Fax: 901/468-3157

*Canadian Air Compressor Ltd.
1875 Industrial Blvd.
Laval, Quebec H7S 1P5
514/334-6810

*Canadian Air Compressor, Ltd.
57 Atomic Avenue
Toronto, Ontario M8Z 5K8
416/252-9505
Fax: 416/252-9228

*Scott Industrial, Inc.
1515 Matheson Blvd., Unit C-1
Mississauga, Ontario L4W 2P5
416/624-6330

*Scott Industrial Prods. Ltd.
5859 CH St. Francois
Montreal, Quebec H4S 1B6
514/336-5661
Fax: 514/336-1158

AUSTRALIA
Godfrey Howden Engrg. Pty Ltd.
P.O. Box 84, Niddrie
Victoria 3042, Australia
338-3666, Ext. 39

OPERATING INSTRUCTIONS & PARTS MANUAL

HEAVY-DUTY TEFC GEARMOTORS

MODELS 6K351 THRU 6K354, 6K369, 6K375, 6K383, 6K396, 6K506, 6K583, 2Z842 THRU 2Z845 AND 6Z399 THRU 6Z403

FORM 5S1291
02160
0490/142/5M

READ CAREFULLY BEFORE ATTEMPTING TO ASSEMBLE, INSTALL, OPERATE OR MAINTAIN THE PRODUCT DESCRIBED. PROTECT YOURSELF AND OTHERS BY OBSERVING ALL SAFETY INFORMATION. FAILURE TO COMPLY WITH INSTRUCTIONS COULD RESULT IN PERSONAL INJURY AND/OR PROPERTY DAMAGE! RETAIN INSTRUCTIONS FOR FUTURE REFERENCE.

Description

Dayton Maxi-Torq parallel shaft gearmotors are designed for use on chemical feeders, conveyors, packing machines, etc. Units come equipped with a die cast aluminum gearcase and lip type rubber oil seals on the input and output shafts. Gearing consists of helical high speed stage and spur at subsequent stages. Needle and ball bearings are used in the gearcase and motor.

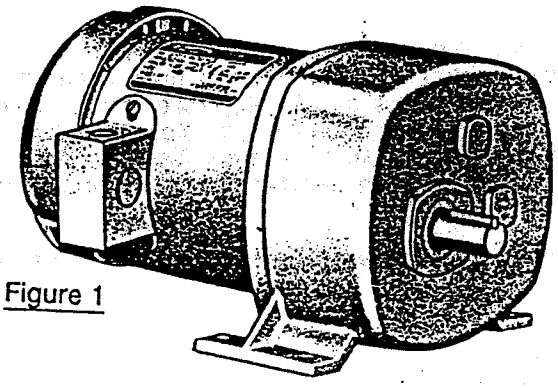

Figure 1

Dimensions

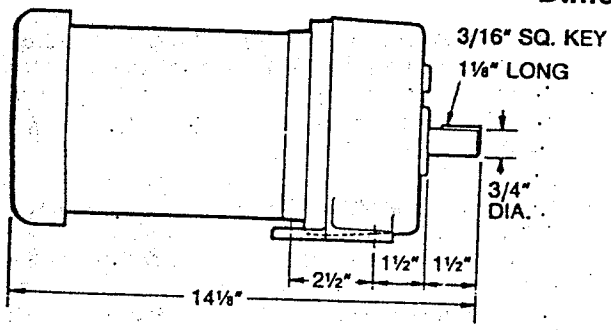

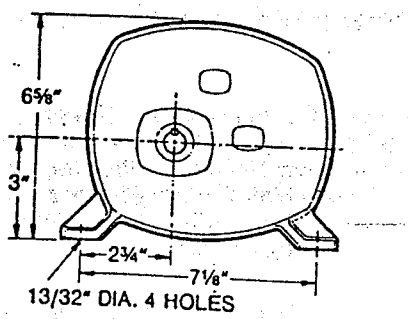

Specifications

MODEL	F/L RPM	INPUT HP	MOTOR F/L AMPS	GEAR RATIO	F/L TORQUE IN-LBS	REDUCTION	MOTOR				
							TYPE	ENCLO-SURE	ELECTRICAL	DUTY	SERVICE FACTOR
6K351	12	1/4	3.7	144.5:1	992	Triple	Split PH.	TEFC	115V, 60 Hz	Cont.	1.0
6K352	27	1/4	3.7	63.5:1	500	Triple	Split PH.	TEFC	115V, 60 Hz	Cont.	1.0
6K353	60	1/4	3.7	28.6:1	240	Double	Split PH.	TEFC	115V, 60 Hz	Cont.	1.0
6K354	135	1/4	3.7	12.7:1	100	Double	Split PH.	TEFC	115V, 60 Hz	Cont.	1.0
6Z399	5.4	1/4	3.7	315.5:1	1087	Triple	Split PH.	TEFC	115V, 60 Hz	Cont.	1.0
6Z400	8	1/4	3.7	210:1	974	Triple	Split PH.	TEFC	115V, 60 Hz	Cont.	1.0
6Z401	18	1/4	3.7	95:1	800	Triple	Split PH.	TEFC	115V, 60 Hz	Cont.	1.0
6K396	27	1/3	5.7	63.5:1	700	Triple	Split PH.	TEFC	115V, 60 Hz	Cont.	1.0
2Z842	40	1/3	5.7	42.8:1	450	Double	Split PH.	TEFC	115V, 60 Hz	Cont.	1.0
6K369	60	1/3	5.7	28.6:1	320	Double	Split PH.	TEFC	115V, 60 Hz	Cont.	1.0
2Z843	90	1/3	5.7	19:1	220	Double	Split PH.	TEFC	115V, 60 Hz	Cont.	1.0
2Z844	157	1/3	5.7	11:1	125	Double	Split PH.	TEFC	115V, 60 Hz	Cont.	1.0
2Z845	288	1/3	5.7	6.1:1	70	Double	Split PH.	TEFC	115V, 60 Hz	Cont.	1.0
6Z402	18	1/3	5.7	95:1	1017	Triple	Split PH.	TEFC	115V, 60 Hz	Cont.	1.0
6K375	40	1/2	7.9	42.8:1	700	Double	Split PH.	TEFC	115V, 60 Hz	Cont.	1.0
6K583	60	1/2	7.9	28.6:1	480	Double	Split PH.	TEFC	115V, 60 Hz	Cont.	1.0
6K383	90	1/2	7.9	19:1	320	Double	Split PH.	TEFC	115V, 60 Hz	Cont.	1.0
6K506	135	1/2	7.9	12.7:1	215	Double	Split PH.	TEFC	115V, 60 Hz	Cont.	1.0
Z403	22	1/2	7.9	80:1	1105	Triple	Split PH.	TEFC	115V, 60 Hz	Cont.	1.0

General Safety Information

1. Follow all local electrical and safety codes, as well as the National Electrical Code (NEC) and the Occupational Safety and Health Act (OSHA).
2. Motor must be securely and adequately grounded. This can be accomplished by wiring with a grounded, metal-clad raceway system, by using a separate ground wire connected to the bare metal of the motor frame, or other suitable means. Refer to NEC Article 250 (Grounding) for additional information.
3. Do not depend on a motor control device (motor starter, etc.) to ensure against unexpected motor start-up. Always disconnect power source before working on or near a motor or its connected load. If the power disconnect point is out-of-sight, lock it in the open position and tag to prevent unexpected application of power.
4. All moving parts should be guarded.
5. Be careful when touching the exterior of an operating motor; it may be hot enough to be painful or cause injury. With modern motors this condition is normal if operated at rated load and voltage; modern motors are built to operate at higher temperatures.
6. Protect the power cable from coming in contact with sharp objects.
7. Do not kink power cable and never allow the cable to come in contact with oil, grease, hot surfaces, or chemicals.
8. Make certain that the power source conforms to the requirements of your equipment.
9. Be sure output shaft key is fully captive or removed before unit is energized.
10. When cleaning electrical or electronic equipment, always use an approved cleaning agent such as dry cleaning solvent.

Installation

WARNING: DISCONNECT POWER BEFORE INSTALLING.

CAUTION: When an installation involves a holding or overhauling application (such as a hoist or conveyor), a separate magnetic brake or other locking device should be used. Do not depend on gear friction to hold the load. A magnetic disk brake, Model 4Z447, is available for this gearmotor.

1. Gearmotor should be located in a clean and dry area with access to adequate cooling air supply. If installation is outdoors, make certain that the unit is protected from the weather.

WARNING: DO NOT INSTALL IN AN EXPLOSIVE ATMOSPHERE!

2. Mount gearmotor to a rigid surface, preferably metallic, using largest bolts that will fit through the base hole.
3. Make proper wiring connections:

NOTE: Motor can be wired for clockwise (CW) rotation facing output shaft; should counterclockwise (CCW) rotation be required, interchange RED and BLACK leads (refer to wiring diagram on motor nameplate). For gearmotors with double reduction gearmotor, output shaft rotation will be in same direction as motor. For triple reduction units, rotation of output shaft will be opposite that of motor.

a. All wiring and electrical connections must comply with the National Electrical Code, and local electrical codes in effect. In particular, refer to Article 430 (Motors, Motor Circuits and Controllers) of the NEC.

b. For proper motor connections, refer to the connection diagram located on the nameplate or inside the terminal box. Make certain that the power source conforms to the voltage requirements for the motor.

c. Whenever possible, the gearmotor should be powered from a separate branch circuit of adequate capacity to keep voltage drop to a minimum during starting and running. For longer runs, increase wire size in accordance with the Wire Selection Guide shown below. Never use smaller than #14 AWG for permanent installations.

WIRE SELECTION GUIDE

MOTOR HP	25 Ft	50 Ft	100 Ft	150 Ft	200 Ft
1/4	#16	#14	#10	#8	#8
1/3	14	12	10	8	6
1/2	14	12	8	6	6

d. Motor should be grounded by use of a separate grounding conductor, connected to the motor frame. Verify that the ground wire runs to a good electrical ground such as a grounded conduit or water system.

IMPORTANT: USE OF A MOTOR STARTER, EITHER MANUAL OR MAGNETIC, INCORPORATING THERMAL PROTECTION, IS ADVISABLE AND MAY BE REQUIRED BY LOCAL ELECTRICAL CODES. FOLLOW MOTOR STARTER MANUFACTURER'S RECOMMENDATIONS ON THERMAL OVERLOAD RELAY HEATER SELECTION. DO NOT OVERSIZE HEATERS. DO NOT USE AUTOMATIC RESET STARTING DEVICES WHERE UNEXPECTED STARTING OF UNIT COULD BE HAZARDOUS TO PERSONNEL OR EQUIPMENT.

Operation

ATTACHING (COUPLING) THE LOAD

NOTE: To determine output torque capacity for operating conditions other than a normal 8-hour day and shock-free operation, multiply the rated output torque (see Specifications) by the applicable load factor listed below. Shock loads should be avoided.

LOAD FACTOR CHART

TYPE OF LOAD	LOAD FACTOR
8 to 10-hr. day, with moderate shock loads.	0.8
24-hr. service, with uniform loads.	0.8
24-hr. service, with moderate shock loads.	0.6

OVERHUNG LOAD

1. When connecting a load to a gearmotor output shaft, care should be taken to avoid excessive tension when either belt or chains with chain sprocket are used. Overhung load should not exceed 325 pounds at center of gearmotor shaft projection.
2. If the unit is directly coupled to a load, carefully check the alignment and coupling run-out to avoid overloading the motor and/or bearings. Axial (end) thrust should not exceed 50 pounds.
3. Overhung load calculation:

$$\frac{\text{Full load torque of gearmotor} \times 2}{\text{Pitch diameter of sprocket, pulley or gear}} = \text{Pounds of load on center of gearmotor output shaft.}$$

DRIVE FACTORS:

Multiply pounds of load (obtained from above formula) by the correct factor listed below to determine actual overhung load in "pounds" on center of gearmotor output shafts.

1. Sprocket 1.0
2. Pulley 1.5
3. Gear 1.25

Maximum allowable overhung load is 325 pounds. Locate the center line of the sprocket, pulley or gear as close to the bearing seal as practical to minimize overhung load and increase bearing life. If center line of the sprocket, pulley or gear is located more than 3/4" away from oil seal, consult factory to determine overhung load.

Maintenance

WARNING: MAKE CERTAIN THAT THE POWER SUPPLY IS DISCONNECTED BEFORE ATTEMPTING TO SERVICE OR REMOVE ANY COMPONENTS! IF THE POWER DISCONNECT POINT IS OUT-OF-SIGHT, LOCK IT IN THE OPEN POSITION AND TAG TO PREVENT UNEXPECTED APPLICATION OF POWER.

LUBRICATION

This unit is lubricated for life at the factory and periodic relubrication should not be required under normal conditions, regardless of mounting position.

CLEANING

Properly selected and installed electric motors are capable of operating for long periods with minimal maintenance. Periodically clean dirt accumulations from open-type motors, especially in and around vent openings, preferably by vacuuming (avoids imbedding dirt in windings).

DISASSEMBLY

1. Remove the nine Torx® flathead screws (Ref. No. 2) from the back end of the gearcase. Suitable Torx® wrenches may be ordered, Stock No. 2A276.
2. With the unit output shaft down, pry off the motor and cover assembly. This will destroy gasket. Use care to avoid scratching or nicking the gasket mounting surface. Watch so that the thrust balls (Ref. No. 5) are not dropped and lost.

CAUTION: Do not damage seal bead on cover.

3. With the housing disassembled, the gears can now be removed.
4. The motor can be dismounted by removing the fan guard and fan from the back of the motor. This exposes four screws which pass through the motor and into the gearcase cover. Remove the screws (thru-bolts) and remove the motor adapter (Ref. No. 1) from the motor shell by gently tapping with a mallet.
5. Oil seals can be removed by prying out with a screwdriver. Clean the cavity and press the new seal squarely in place, lip edge toward gear cavity, until seal is flush. Cover the output shaft with 1½ wraps of paper or thin plastic to guide seal lip onto the shaft and avoid cutting it on keyway.

REASSEMBLY

1. Assemble rear (switch end) end shield to motor stator first. Tuck all loose leads away so as not to contact rotor parts. Then insert rotor in stator. Finally, assemble front end shield (motor adapter).
2. Care must be taken that the thrust balls remain in place during assembly. This can readily be accomplished with a small dab of grease.
3. Clean gear box completely and replace with new lubricant. After all gears are in place, refill the gearcase with Hodson 4111 or Gulf Harmony #121 heavy gear oil. About twenty-one ounces (by weight) will be required. DO NOT MIX LUBRICANTS.
4. Install a new gasket and place the motor cover assembly on the gearcase. Replace and uniformly tighten the nine Torx® flathead screws.
5. Start and stop the motor. The gearing should turn freely and coast slightly as the motor comes to a stop.

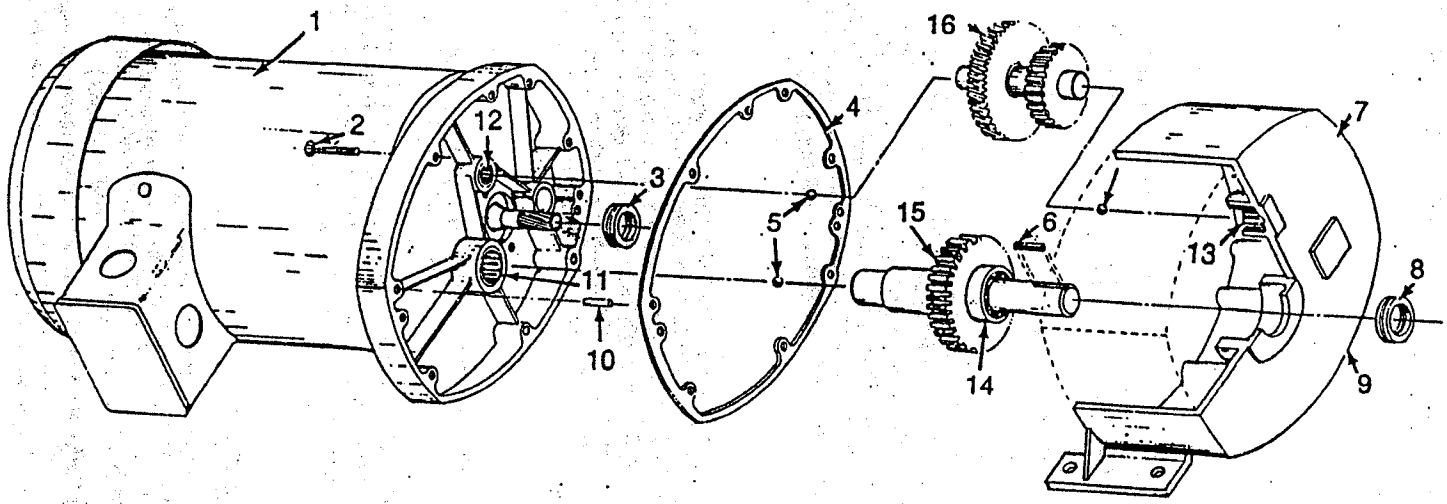

Figure 3 — Replacement Parts Illustration for Double Reduction Models

Replacement Parts List

REF. NO.	DESCRIPTION	PART NUMBER FOR MODEL: 6K369	6K375	6K583	6K383	6K506	6K353	6K354	2Z842	2Z843	2Z844	2Z845	QTY.
1	Motor & adapter assembly	9K315	9K316	9K316	9K316	9K316	9K284	9K284	9K315	9K315	9K315	9K315	1
—	† Motor adapter only	103-484-0130	103-484-0130	103-484-0130	103-484-0130	103-484-0130	103-484-0130	103-484-0130	103-484-0130	103-484-0130	103-484-0130	103-484-0130	1
2	10-24 x 1⅛" Flathead screw	874-190-5182	874-190-5182	874-190-5182	874-190-5182	874-190-5182	874-190-5182	874-190-5182	874-190-5182	874-190-5182	874-190-5182	874-190-5182	9
3	Input seal	902-101-8411	902-101-8411	902-101-8411	902-101-8411	902-101-8411	902-101-8411	902-101-8411	902-101-8411	902-101-8411	902-101-8411	902-101-8411	1
4	Gasket	127-484-0100	127-484-0100	127-484-0100	127-484-0100	127-484-0100	127-484-0100	127-484-0100	127-484-0100	127-484-0100	127-484-0100	127-484-0100	1
5	Thrust ball	908-110-2500	908-110-2500	908-110-2500	908-110-2500	908-110-2500	908-110-2500	908-110-2500	908-110-2500	908-110-2500	908-110-2500	908-110-2500	3
6	3/16" Square key	130-484-0111	130-484-0111	130-484-0111	130-484-0111	130-484-0111	130-484-0111	130-484-0111	130-484-0111	130-484-0111	130-484-0111	130-484-0111	1
7	Housing	101-484-0130	101-484-0130	101-484-0130	101-484-0130	101-484-0130	101-484-0130	101-484-0130	101-484-0130	101-484-0130	101-484-0130	101-484-0130	1
8	Output seal	902-122-0411	902-122-0411	902-122-0411	902-122-0411	902-122-0411	902-122-0411	902-122-0411	902-122-0411	902-122-0411	902-122-0411	902-122-0411	1
9	Pipe plug	905-110-4182	905-110-4182	905-110-4182	905-110-4182	905-110-4182	905-110-4182	905-110-4182	905-110-4182	905-110-4182	905-110-4182	905-110-4182	1
10	3/16" dia. Pin	904-306-1201	904-306-1201	904-306-1201	904-306-1201	904-306-1201	904-306-1201	904-306-1201	904-306-1201	904-306-1201	904-306-1201	904-306-1201	2
11	3/4" (.750) Needle bearing	900-411-0750	900-411-0750	900-411-0750	900-411-0750	900-411-0750	900-411-0750	900-411-0750	900-411-0750	900-411-0750	900-411-0750	900-411-0750	1
12	3/8" (.375) Needle bearing	900-410-0375	900-410-0375	900-410-0375	900-410-0375	900-410-0375	900-410-0375	900-410-0375	900-410-0375	900-410-0375	900-410-0375	900-410-0375	1
13	9/16" (.563) Needle bearing	900-411-0562	900-411-0562	900-411-0562	900-411-0562	900-411-0562	900-411-0562	900-411-0562	900-411-0562	900-411-0562	900-411-0562	900-411-0562	1
14	Ball bearing	900-311-0787	900-311-0787	900-311-0787	900-311-0787	900-311-0787	900-311-0787	900-311-0787	900-311-0787	900-311-0787	900-311-0787	900-311-0787	1
15	Low speed sub-assembly	144-561-0120	144-560-0120	144-561-0120	144-562-0120	144-484-0120	144-561-0120	144-484-0120	144-560-0120	144-562-0120	144-582-0120	144-583-0120	1
16	High speed sub-assembly	146-564-0130	146-563-0130	146-564-0130	146-565-0130	146-566-0130	146-564-0130	146-566-0130	146-563-0130	146-565-0130	146-582-0110	146-583-0110	1

(†) Included with Ref. No. 1.

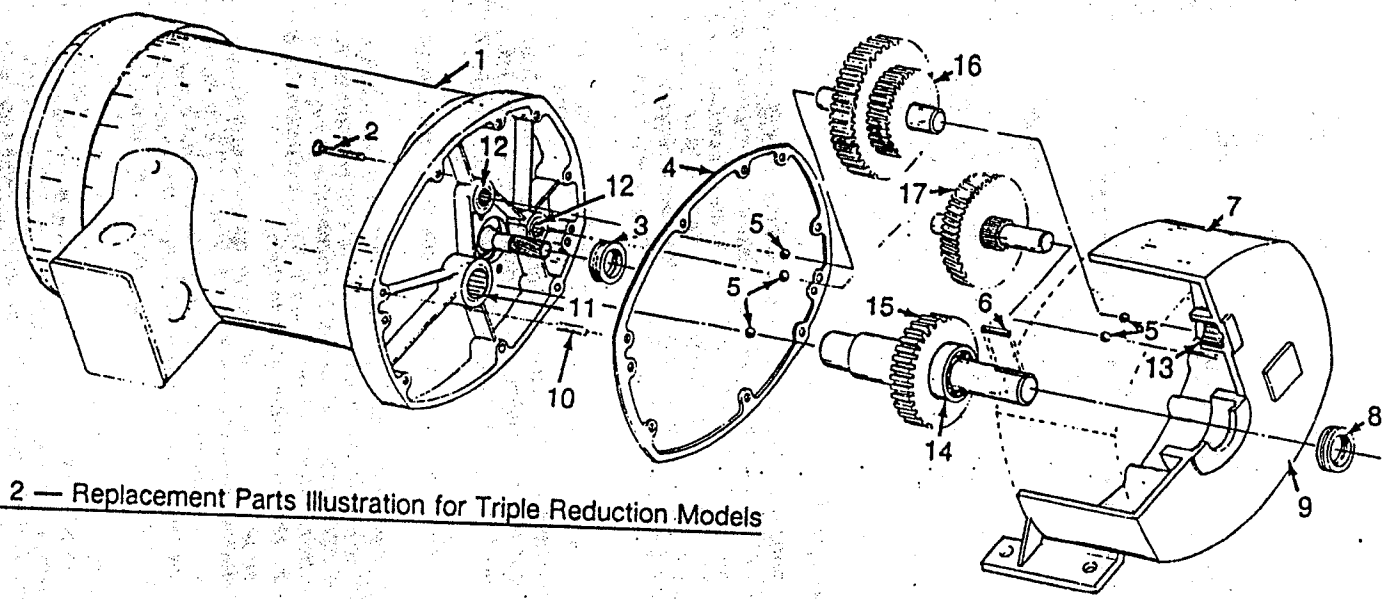

Figure 2 — Replacement Parts Illustration for Triple Reduction Models

ORDER REPLACEMENT PARTS BY CALLING TOLL FREE

1-800-323-0620

Please provide the following information:

- Model Number
- Serial Number (if any)
- Parts Description and Number as shown in Parts List

Address parts correspondence to:

Dayton Electric Mfg. Co.
1250 Busch Parkway
Buffalo Grove, IL 60089

Replacement Parts List

REF. NO.	DESCRIPTION	PART NUMBER FOR MODEL: 6K396	6K351	6K352	6Z399	6Z400	6Z401	6Z402	6Z403	QTY.
1	Motor & adapter assembly	9K315	9K284	9K284	9K284	9K284	9K284	9K315	9K316	1
—	Motor adapter only (incl'd with Ref. No. 1)									
2	10-24 x 1⅛" Flathead screw	103-484-0130	103-484-0130	103-484-0130	103-484-0130	103-484-0130	103-484-0130	103-484-0130	103-484-0130	1
3	Input seal	874-190-5182	874-190-5182	874-190-5182	874-190-5182	874-190-5182	874-190-5182	874-190-5182	874-190-5182	9
4	Gasket	902-101-8411	902-101-8411	902-101-8411	902-101-8411	902-101-8411	902-101-8411	902-101-8411	902-101-8411	1
		127-484-0100	127-484-0100	127-484-0100	127-484-0100	127-484-0100	127-484-0100	127-484-0100	127-484-0100	1
5	Thrust ball	908-110-2500	908-110-2500	908-110-2500	908-110-2500	908-110-2500	908-110-2500	908-110-2500	908-110-2500	5
6	3/16" Square key	130-484-0111	130-484-0111	130-484-0111	130-484-0111	130-484-0111	130-484-0111	130-484-0111	130-484-0111	1
7	Housing (mounting holes are unthreaded, self-tapping)	101-484-0130	101-484-0130	101-484-0130	101-484-0130	101-484-0130	101-484-0130	101-484-0130	101-484-0130	1
8	Output seal	902-122-0411	902-122-0411	902-122-0411	902-122-0411	902-122-0411	902-122-0411	902-122-0411	902-122-0411	1
9	Pipe plug	905-110-4182	905-110-4182	905-110-4182	905-110-4182	905-110-4182	905-110-4182	905-110-4182	905-110-4182	1
10	3/16" dia. Pin	904-306-1201	904-306-1201	904-306-1201	904-306-1201	904-306-1201	904-306-1201	904-306-1201	904-306-1201	2
11	3/4" (.750) Needle bearing	900-411-0750	900-411-0750	900-411-0750	900-411-0750	900-411-0750	900-411-0750	900-411-0750	900-411-0750	1
12	3/8" (.375) Needle bearing	900-410-0375	900-410-0375	900-410-0375	900-410-0375	900-410-0375	900-410-0375	900-410-0375	900-410-0375	2
13	9/16" (.563) Needle bearing	900-411-0562	900-411-0562	900-411-0562	900-411-0562	900-411-0562	900-411-0562	900-411-0562	900-411-0562	2
14	Ball bearing	900-311-0787	900-311-0787	900-311-0787	900-311-0787	900-311-0787	900-311-0787	900-311-0787	900-311-0787	1
15	Low speed sub-assembly	144-484-0120	144-561-0120	144-484-0120	144-484-0150	144-482-0120	144-562-0120	144-562-0120	144-484-0500	1
16	Intermediate speed sub-assembly	145-484-0110	145-561-0110	145-484-0110	145-484-0150	145-482-0211	145-562-0110	145-562-0110	145-484-0200	1
17	High speed sub-assembly	146-484-0130	146-484-0130	146-484-0130	146-484-0150	146-484-0130	146-484-0130	146-484-0130	146-484-0500	1

Troubleshooting Chart

SYMPTOM	POSSIBLE CAUSE(S)	CORRECTIVE ACTION
Unit fails to operate	1. Blown fuse or open circuit breaker 2. No power 3. Defective motor 4. Defective manual or magnetic control switch	1. Replace fuse or reset circuit breaker 2. Contact power company 3. Repair or replace 4. Repair or replace
Unit operational, but no output	Defective gear(s)	Check and replace if necessary
Intermittent rotation of output shaft	Damaged intermediate gear assembly possibly caused by shock load	Replace gear and, if possible, avoid shock load
Excessive noise	1. Bearings or gears worn 2. Belt or chain too tight 3. Overhung load exceeds rating and causes bearing wear	1. Replace 2. Adjust tension 3. Correct load and/or replace bearing

LIMITED WARRANTY

DAYTON TWO-YEAR LIMITED WARRANTY. Heavy-duty TEFC gearmotors, Models 6K351 thru 6K354, 6K369, 6K375, 6K383, 6K396, 6K506, 6K583, 2Z842 thru 2Z845 & 6Z399 thru 6Z403, are warranted by Dayton Electric Mfg. Co. (Dayton) to the original user against defects in workmanship or materials under normal use for two years after date of purchase. Any part which is determined by Dayton to be defective in material or workmanship and returned to an authorized service location, as Dayton designates, shipping costs prepaid, will be, as the exclusive remedy, repaired or replaced at Dayton's option. For limited warranty claim procedures, see PROMPT DISPOSITION below. This limited warranty gives purchasers specified legal rights which vary from state to state.

LIMITATION OF LIABILITY. To the extent allowable under applicable law, Dayton's liability for consequential and incidental damages is expressly disclaimed. Dayton's liability in all events is limited to, and shall not exceed, the purchase price paid.

WARRANTY DISCLAIMER. Dayton has made a diligent effort to illustrate and describe the products in this literature accurately; however, such illustrations and descriptions are for the sole purpose of identification, and do not express or imply a warranty that the products are merchantable, or fit for a particular purpose, or that the products will necessarily conform to the illustrations or descriptions.

Except as provided below, no warranty or affirmation of fact, expressed or implied, other than as stated in "LIMITED WARRANTY" above is made or authorized by Dayton.

PRODUCT SUITABILITY. Many states and localities have codes and regulations governing sales, construction, installation, and/or use of products for certain purposes, which may vary from those in neighboring areas. While Dayton attempts to assure that its products comply with such codes, it cannot guarantee compliance, and cannot be responsible for how the product is installed or used. Before purchase and use of a product, please review the product application, and national and local codes and regulations, and be sure that the product, installation, and use will comply with them.

Certain aspects of disclaimers are not applicable to consumer products; e.g., (a) some states do not allow the exclusion or limitation of incidental or consequential damages, so the above limitation or exclusion may not apply to you; (b) also, some states do not allow limitations on how long an implied warranty lasts, consequently the above limitation may not apply to you; and (c) by law, during the period of the Limited Warranty, any implied warranties of merchantablility or fitness for a particular purpose applicable to consumer products purchased by consumers, may not be excluded or otherwise disclaimed.

PROMPT DISPOSITION. Dayton will make a good faith effort for prompt correction or other adjustment with respect to any product which proves to be defective within limited warranty. For any product believed to be defective within limited warranty, first write or call dealer from whom product was purchased. Dealer will give additional directions. If unable to resolve satisfactorily, write to Dayton at address below, giving dealer's name, address, date and number of dealer's invoice, and describing the nature of the defect. Title and risk of loss pass to buyer on delivery to common carrier. If product was damaged in transit to you, file claim with carrier.

Manufactured for Dayton Electric Mfg. Co., 5959 W. Howard St., Chicago, IL 60648

Service Record

DATE	MAINTENANCE PERFORMED	REPLACEMENT COMPONENTS REQUIRED